SSL-600i

OPERATIONS MANUAL

Receiving and Unloading Instructions

NOTE: It is the customer's responsibility to notify the shipping company and file a claim in the event that equipment has been lost or damaged in transit.

Before the carrier leaves your facility:

1. As each item is removed from the vehicle, compare it with the carrier's bill of lading.
2. Ensure that all items and weights agree with the carrier's bill of lading.
3. If anything is missing or damaged register a claim BEFORE signing for the shipment.
4. Carefully remove all equipment and materials from the shipping container.
5. Compare all items with the packing list.
6. Contact Sleeve Seal if items do not match the packing list.

WARNING

Make certain any lifting or moving equipment is rated for the weight of the load. Moving or lifting heavy equipment or large crates without an adequate equipment is dangerous for personnel and equipment. ONLY authorized and trained personnel should operate lifting and moving equipment according to the lifting and moving equipment manufacturer's recommendations and instructions.

Contents

Preface

Chapter 1 - Safety
1.1 General Safety Guidelines
1.2 Warning Sticker Symbol Glossary
1.3 Safety Rules

Chapter 2 - Details
2.1 Machine Specifications
2.2 Noise Levels
2.3 Function
2.4 Machine Diagram
2.5 Section Descriptions

Chapter 3 - Installation
3.1 Location Guidelines
3.2 Lifting
3.3 Machine Leveling
3.4 Power Connection
3.5 Temporary Storage
3.6 Cleaning

Chapter 4 - Photo Sensors
4.1 Label Detect Sensor
4.2 Container Detect Sensor

Chapter 5 - Cutter Box
5.1 Changing Blades

Chapter 6 - Operation (Touch Screen Interface)
6.1 Main
6.2 Auto
6.3 Set

Contents - *Continued*

Chapter 7 - Other Adjustments
7.1 Feed Screw
7.2 Side Belt
7.3 Rubber Brushes

Chapter 8 - Trouble Shooting
8.1 Labeling Defect

Chapter 9 - Lubrication & Maintenance

Chapter 10 - Electrical
10.1 Electrical Safety
10.2 Electrical Drawings

Preface

This Owner's Manual contains important information, tips, suggestions and warnings about using the SSL-600i Sleeve Labeler. This manual must be read in full prior to operation to insure both operator and equipment safety.

The SSL-600i Sleeve Labeler's design features allow it to stand out in it's class. The stainless steel and polarized aluminum alloy construction creates a strong, durable, and corrosive resistant product. The modular component design aides in fast and simple product changeover on a wide array of container sizes. The operator interface is both simple and intuitive making the "on the fly" adjustments painless. The following information will help you get the most out of these features.

1 Safety

WARNING

Do not attempt to operate the SSL-600i until you have read thoroughly and understand completely all instructions, rules and guidelines in this manual. Failure to comply can result in accidents including fire, electric shock, serious personal injury, and/or voiding of warranty. Keep the Operation Manual with the SSL-600i and review frequently for continuous safe operation.

1.1 General Safety Guidelines

1.1.1 Know your machine.

It is important to learn all aspects of your machine, including application, limitations as well as potential hazards.

1.1.2 Keep guards in place.

For your safety and the safety of the equipment, ensure guards remain in place and in good condition.

1.1.3 Keep area clean.

Keep the areas surrounding the machine clean and free of clutter. Inspect the area regularly for items that may prevent the machine from functioning as intended (i.e. tools, extra containers, etc.).

1.1.4 Operate in a safe environment.

Operate only in a dry and well lit area.

1.1.5 Authorized personnel only.

Only trained personnel should operate and perform maintenance on the labeler. All others should be kept at a safe distance from the work area.

1.1.6 Operate at the designed rate.

Exceeding the design rate will cause failures and can damage the labeler.

1.1.7 Use the right tools.

Always use the right tool for the job. This will make changeover and maintenance faster, easier and safer.

1.1.8 Wear proper apparel.

Wear eye protection and non-slip footwear as well as any protective garments required by the plant. Loose clothing, neckties, rings, and other jewelry can be caught in the moving parts and should not be worn.

1.1.9 Perform all regular maintenance.

Lubrication and worn part replacement will keep the labeler operating safely.

WARNING

1.1.10 Disconnect power before service.
The power supply should be disconnected before servicing motors, accessories, or replacing parts.

1.1.11 Use only recommended accessories.
Only use parts and accessories supplied or recommended by the manufacturer.

1.1.12 Always TURN POWER OFF for the following.
- Leaving the labeler unattended.
- Clearing jams.
- Accessing any door of the labeler.

1.1.13 Warning Stickers
The labeler has series of stickers indicating specific dangers to operators and maintenance personnel. Do not remove these stickers.

1.2 Warning Sticker Glossary

CAUTION:
DANGEROUS
DON'T TOUCH

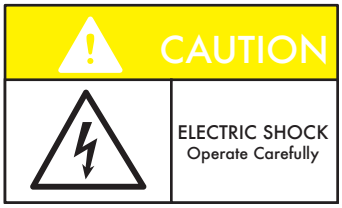

CAUTION:
ELECTRIC SHOCK
OPERATE CAREFULLY

CAUTION:
CUT
KEEP HANDS AWAY

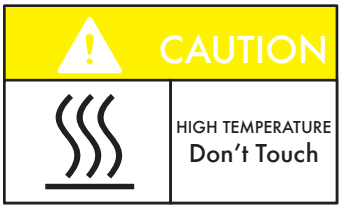

CAUTION:
HIGH TEMPERATURE
DON'T TOUCH

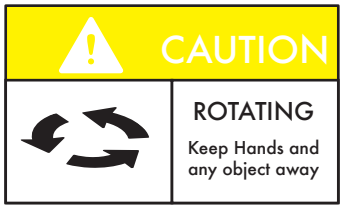

CAUTION:
ROTATING
KEEP HANDS AND
ANY OBJECTS AWAY

CAUTION:
ROLLING
KEEP HANDS AWAY

WARNING

1.3 This machine has been equipped with electric safety switches on both doors, DO NOT bypess electric safety switches or disable electric safety switches.

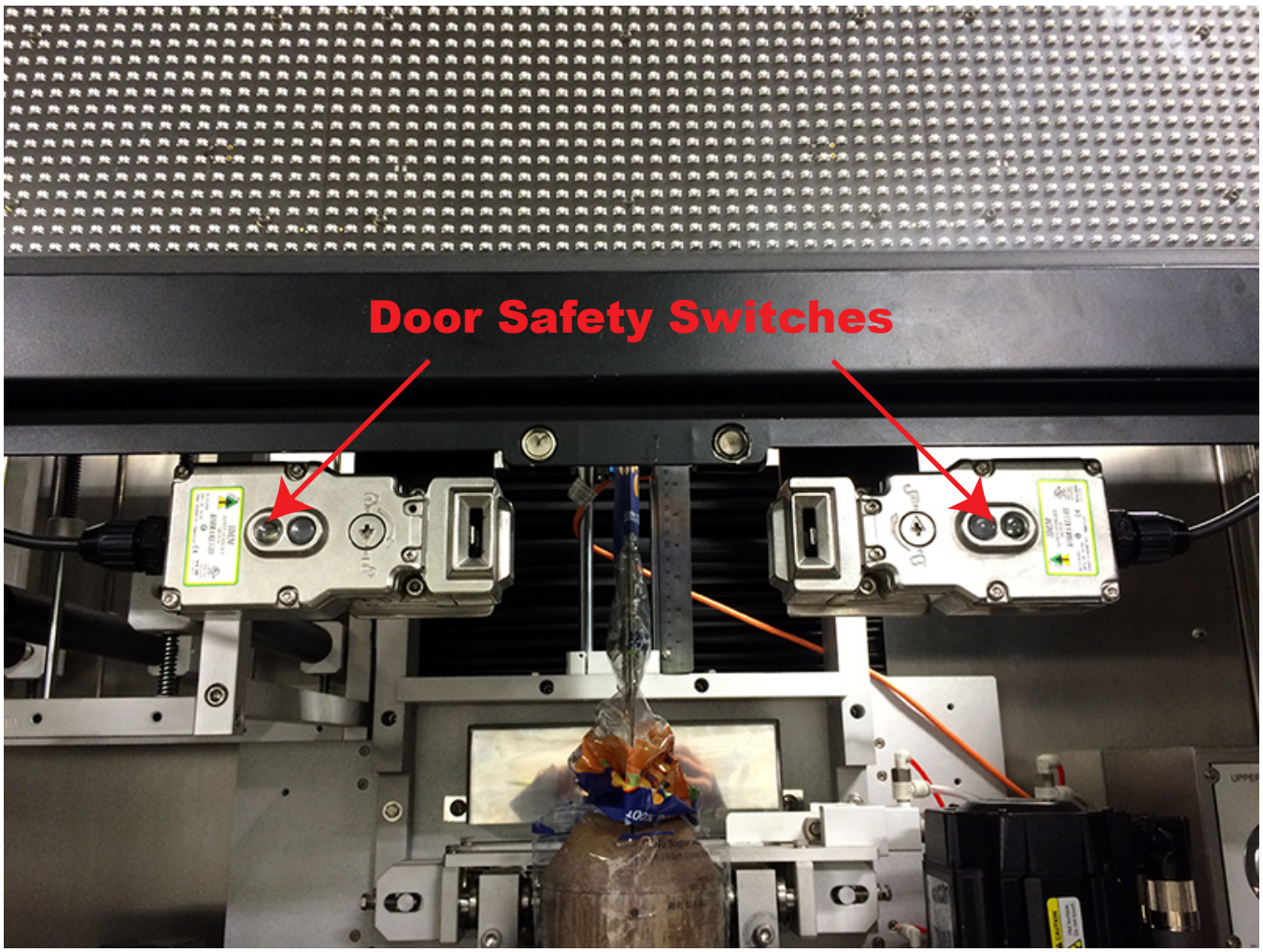

2 Details

2.1 Machine Specifications

Model SSL-600i
Power source 480VAC/3PH/40A
Production speed 600cpm @ 100mm Cut
Length Main motor 5.4 KW
Supported Label Materials PVC , PET , OPS
Machine Dimensions 1190X1250X2100mm

2.2 Noise Levels

Declared A-Weighted Emission Sound Pressure Level, lpAd, in dB re 20 µPa, at the operator's position. Idling = 68 / Operating = 73

Declared A-Weighted Sound Power Level, Lward, in dB re 1pW.
Idling = 81 / Operating = 86

The emission sound pressure level at the operator station is determined in accordance with EN ISO 11204.
The sound power level is determined in accordance with EN ISO 3746.
Constant K = 4dB.

The noise levels indicated above do not guarantee safe work levels. The figures can be used in conjunction with the other noise factors (i.e. other equipment, exposure time, etc.) in the area to determine whether more precautions are required.

2.3 Function

The SSL-600i is designed to be a fully automated shrink label applicator. The machine will accommodate PVC, PET, and OPS label materials and will work on a variety of container shapes (square, round, etc.). It is only suitable to apply shrink labels; the manufacturer will not support any other use.

2.4 Machine Diagram

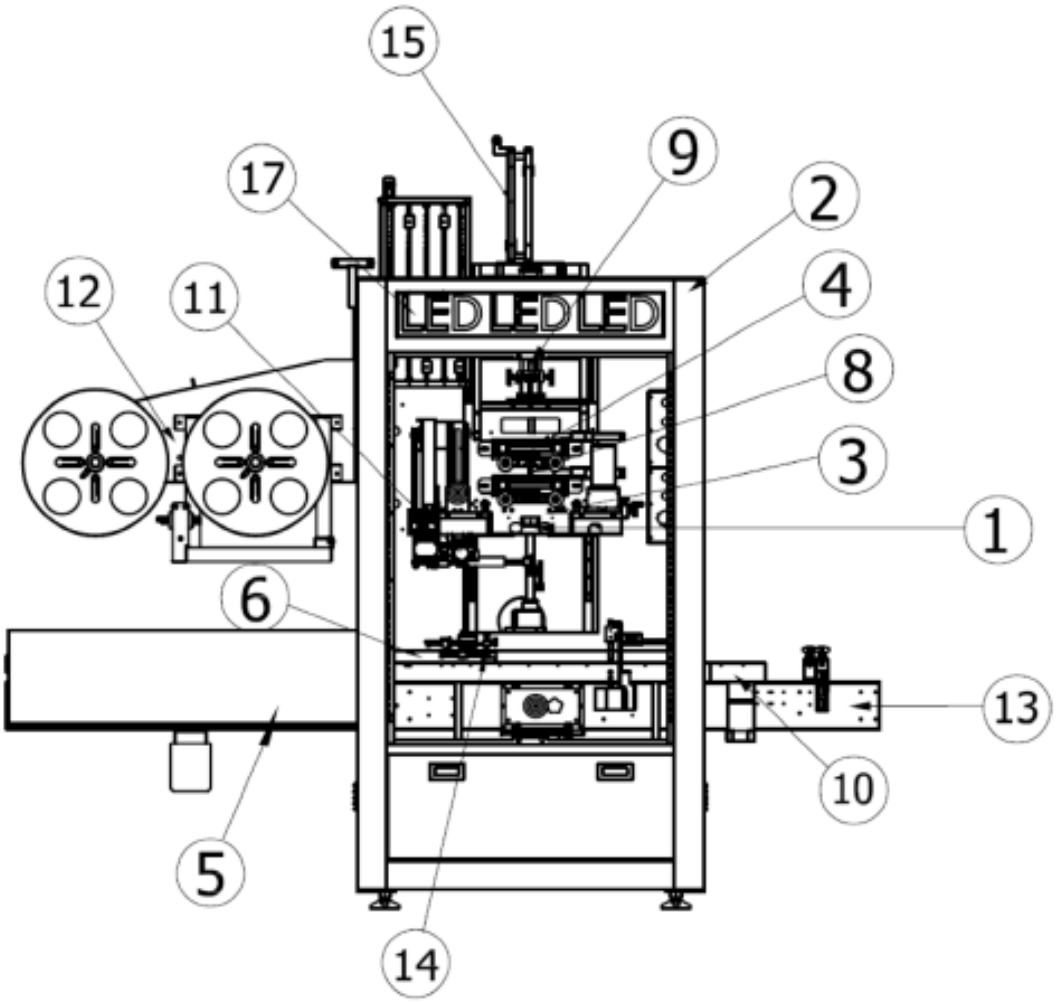

Item #
1 Cutter Box
2 Machine Body
3 Sensor Section
4 Drive Section
5 Feed Screw
6 Hugger Belts
8 Mandrel
9 Label Sensor
10 Brush Section
11 Sleeve Propellent
12 Sleeve Unwinder (Option)
13 Conveyor
14 Product Sensor
15 Sleeve Guider
17 LED Panel

2.5 Section Descriptions

2.5.1 Labeler Body:

Stainless steel frame supporting and protecting the labeler's components and conveyor.

2.5.2 Back Plane:

The Back Plane is the mounting point for the applicator components. This includes the Drive Section, Mandrel, Cutter Box, and Insert Section. The back plane moves the applicator components up and down in unison to accommodate varying container sizes.

2.5.3 Cutter Box:

Six blade, Servo Motor driven label cutting system. Labels are cut to the predetermined length here for application.

2.5.4 Drive Section:

The Drive Section is a series of Servo Motor driven rubber rollers. These rollers are responsible for pulling the labels onto the mandrel, driving labels through the cutter box, and forcing the indexed label into the insert wheels.

2.5.5 Feed Screw:

The Feed Screw separates incoming containers. The gap created guarantees the minimum distance between containers required for accurate label insertion.

2.5.6 Side Belts:

Two horizontal timing belts mounted to the sides of the main conveyor belt. The belts can be adjusted vertically and horizontally (to squeeze the container). While not always used, these can aide in precisely applying a label that does not cover the base of the container. They can also stabilize an unstable container.

2.5.7 Label Detect Sensor:

The Label Detect Sensor sends the signal to the control system indicating a full label index after a label has been applied. This, in conjunction with the manually entered label length, determines when to trigger the cutter box.

2.5.8 Label Tension Assembly:

A series of spring loaded rollers compress during operation to prevent slack from building up between the Label Feed Motor and the mandrel. Slack in this area can cause label failure.

2.5 Section Descriptions - *Continued*

2.5.9 Label Feed Motor:
The Label Feed Motor controls the amount of uncut label material is in the Label Tension Assembly.

2.5.10 Conveyor Frame:
Two Conveyor Frames are provided with splice connection points on the infeed and discharge of the labeler. Designed to carry and return the customers conveyor chain.

2.5.11 Container Detect Sensor:
The Container Detect Sensor sends a signal to the control system to apply a label. This is the system trigger.

2.5.12 Insert Section - Sleeve Propellant
The Insert Section is the area below the cutter box on the mandrel. During operation the Insert Wheels spin constantly and apply the label to the container when triggered.

2.5.13 Vertical Label Tension Assembly:
The Vertical Label Guide is a set of spring tensioned rollers designed to ensure the label is being fed onto the Mandrel from directly above it.

2.5.14 Brush Section:
The Brush Section is an assembly of short rubber rods on both sides of the conveyor that rotate to tap the label down. This ensures the label is at the lowest desired point on the container.

2.5.15 Mandrel:
The Mandrel opens up the flat label to the shape of the container. It is supported in the system by the Drive Section and the Insert Section.

2.5.16 Infeed & Discharge Sensors:
The Infeed & Discharge Sensors (not shown in diagram) are photo eyes to be mounted on the customer conveyor. The Infeed Sensor will stop the Feed Screw if there are too few containers available. The Discharge Sensor will stop the Feed Screw if containers are no longer passing it.

3 Installation

3.1 Location Guidelines

3.1.1 Environment provides an operating temperature between 5°C-40°C (41°F-104°F). NOTE: Labels must be stored in less than 75°

3.1.2 Environment provides a relative humidity of less than 50%.

3.1.3 Area should be free of excessive noise.

3.1.4 Area should be free of excessive vibration.

3.1.5 Area should be well lit.

3.1.6 A minimum of 1000mm / 3.28 feet of free space on each side of the machine.

3.1.7 Must be installed on a level concrete floor.

3.2 Lifting

3.2.1 Only an experienced forklift driver should attempt to move equipment.

3.2.2 Use a forklift capable of lifting 8000lbs.

3.2.3 Make sure load is balanced on the forks.

3.2.4 Forks must be longer than the equipment is deep. Forks must be visible on both sides of the machine while lifting.

3.2.5 Use a second person as a lift spotter and a guide.

3.2.6 **ONLY LIFT FROM THE BOTTOM OF MACHINE**

3.3 Machine Leveling

The labeler must be installed on a solid and level concrete floor with enough space surrounding it for the operator to handle the machine and the materials associated. Once the labeler is in place, use the threaded leveling foot pads provided to level the cabinet and adjust to the specified conveyor elevation - *see 2.4 Machine Diagram.*

3.5 Power Connection

3.5.1 Only qualified electrical personal should perform electrical connections.

3.5.2 Consult electrical drawings provided with your labeler to confirm voltage, phase, and amps required for connection.

3.5.3 Connect power wires L1, L2, and L3 and the ground wire. Improper grounding can cause machine failure.

3.5.4 Power on labeler and test conveyor direction. If conveyor is moving the wrong direction have a qualified electrician interchange the lead wires from the power supply.

3.6 Temporary Storage

Should the labeler need to be stored for an amount of time prior to installation, make sure the labeler is in an area free of moisture and is protected from the elements.

3.7 Cleaning

Prior to start up it is important to clean the dust and dirt that has built up during transportation. With a clean cloth, wipe down all non-lubricated surfaces. Add a small amount of lubrication to the marked lubrication points - *see 10.5 Lubrication Points.*

4 Photo Sensors

4.1 Setting the Label Registration Sensor

While this sensor will be set up by the technician during the installation, product and label design may change. These changes may require a change in the angle of the sensor and a change in the sensitivity. *SICK Registration Sensor Manual is atatched for reference.*

4.1.1 Change the mode to TEACH

4.1.2 Move label so that the label is in front of the sensor then press TEACH 1~3 times until the Q signal flashes quickly.

4.1.3 Move the label so that the section of the label that you would like to use as the trigger is in frontof the sensor and press TEACH 1 time and the Q signal will flash slowly.

4.1.4 Move the label until the reflective tape is visible to the sensor and press TEACH 1 time; Q signal will stay on.

4.1.5 Return to RUN mode for normal operation.

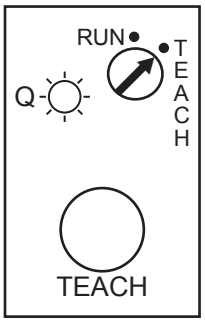

4.2 Setting the Container Detect Sensor

Like the Label Detect Sensor, the Container Detect Sensor will be set by the technician during installation but horizontal and vertical adjustments may be required for different containers.

4.2.1 Horizontal adjustment:

- If label application resembles “A”, adjust the sensor and the reflector to the right.
- If label application resembles “C”, adjust the sensor and the reflector to the left.

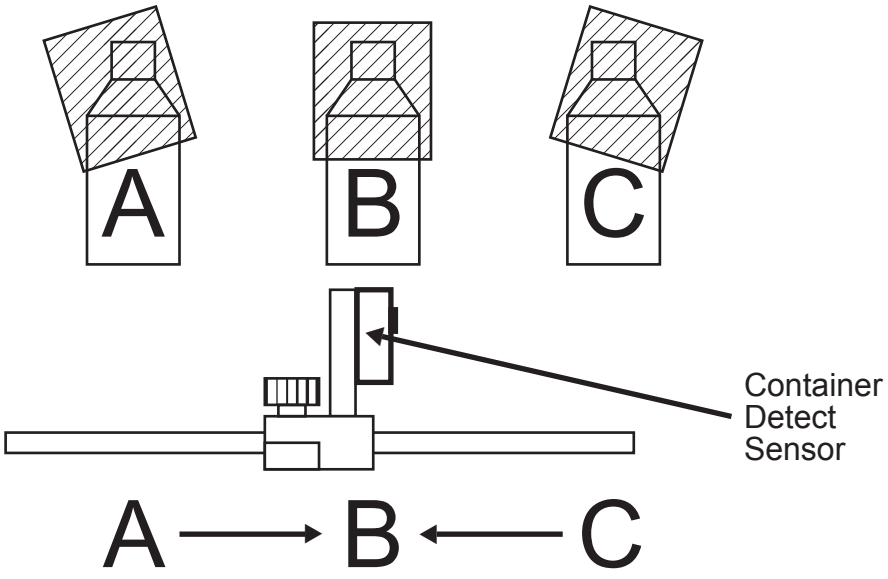

5 Cutter Box

5.1 Changing Blades

5.1.1 Press E Stop and open the cabinet door.

5.1.2 Loosen the Drive Rollers and remove the Mandrel.

5.1.3 Remove the cutter box from the Labeler.

-Use the belt tensioning knob that moves the servo motor and the drive pulley to move them towards the cutter box. This is enough slack in the cutter box timing belt to move it off of the drive pulley.

-Then push the timing belt into the cutter box.

-Loosen the thumb screws that hold the cutter box in place.

-Slide the cutter box out.

5.1.4 Remove screws from bottom guard plates.

5.1.5 Hold the cutter box timing belt to prevent the blades from rotating when working on the blades.

5.1.6 Referring to the diagram below, remove the four screws from the blade retaining plate and remove.

5.1.7 Count the segments of the old blade and break new blade to match.

5.1.8 Put new blade in place and reinstall the blade retaining plate.

5.1.9 Repeat this process for the remainder of the blades.

5.1.10 Reinstall the blade guard plate.

5.1.11 Reinstall the cutter box and the mandrel into the labeler.

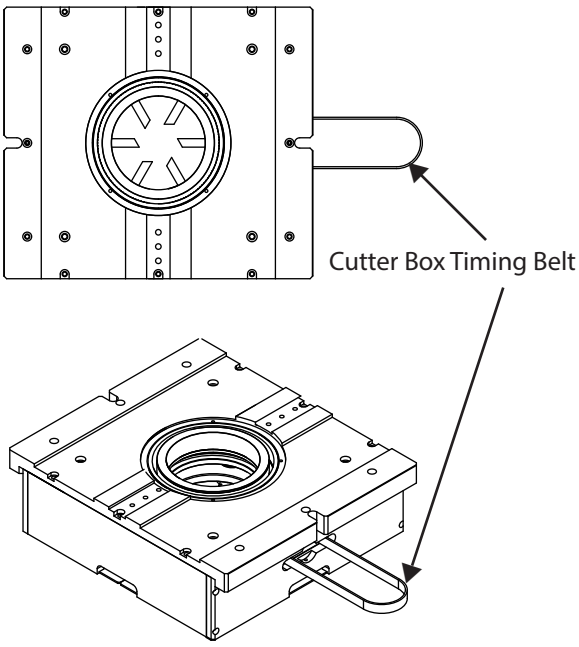

Cutter Box Assembly

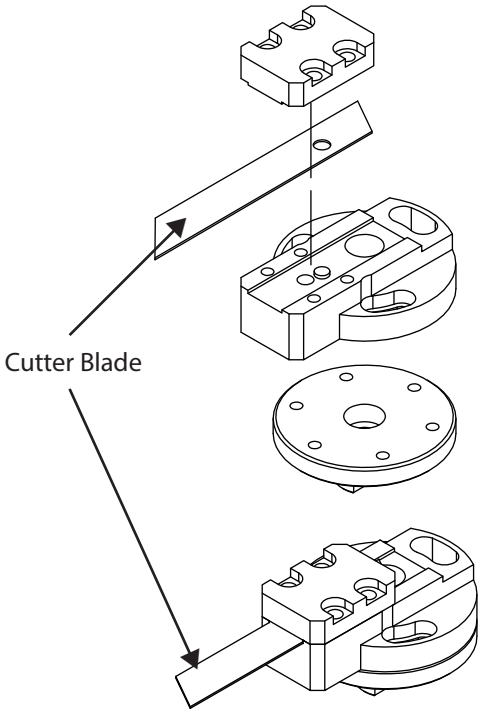

Cutter Head Assembly (Detail)

6 Operation / Touch Screen Interface

6.1 Home Screen Overview

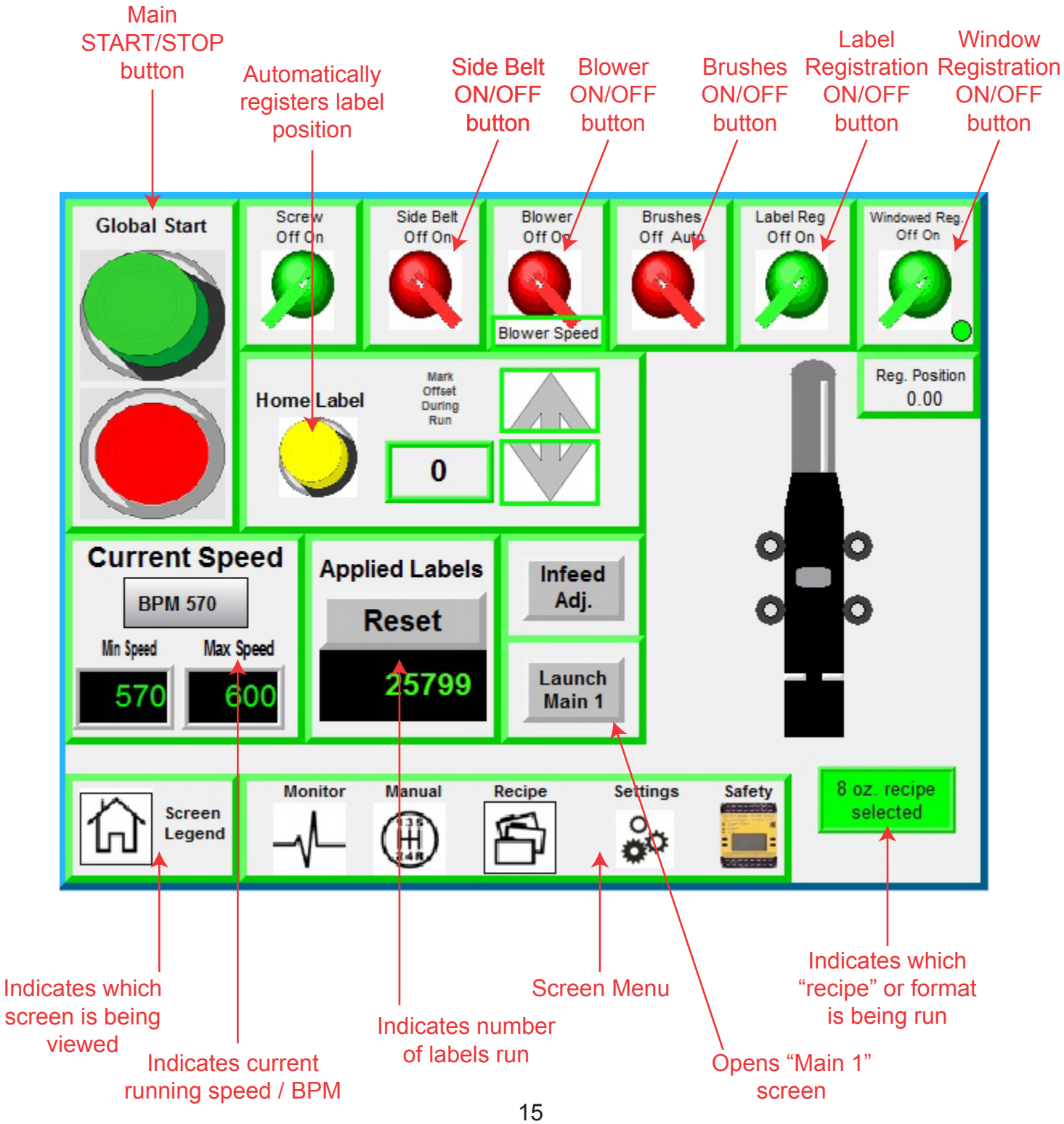

6.2 Main 1 Screen

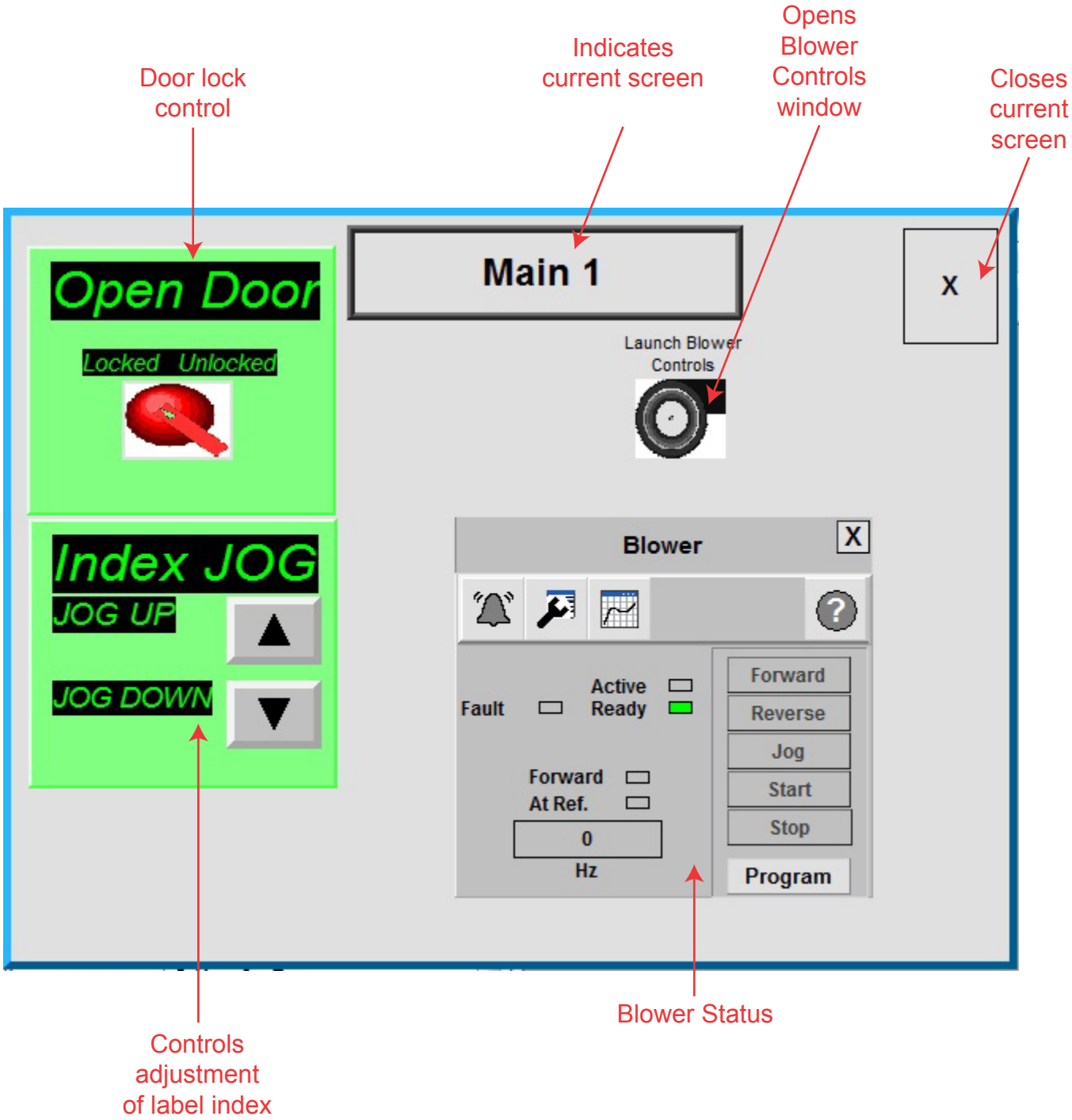

6.3 Engineering Screen

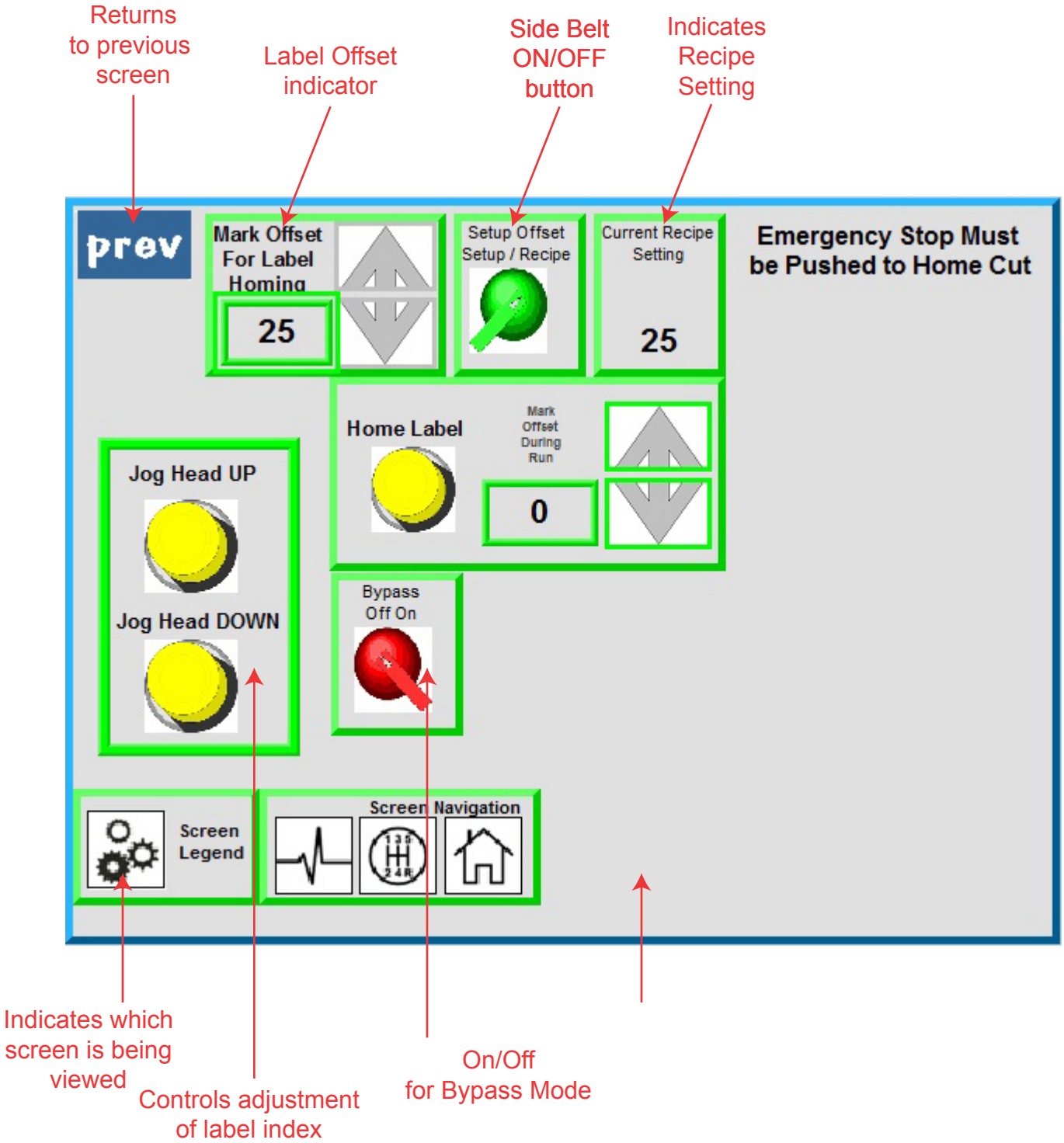

6.5 Controls Screen

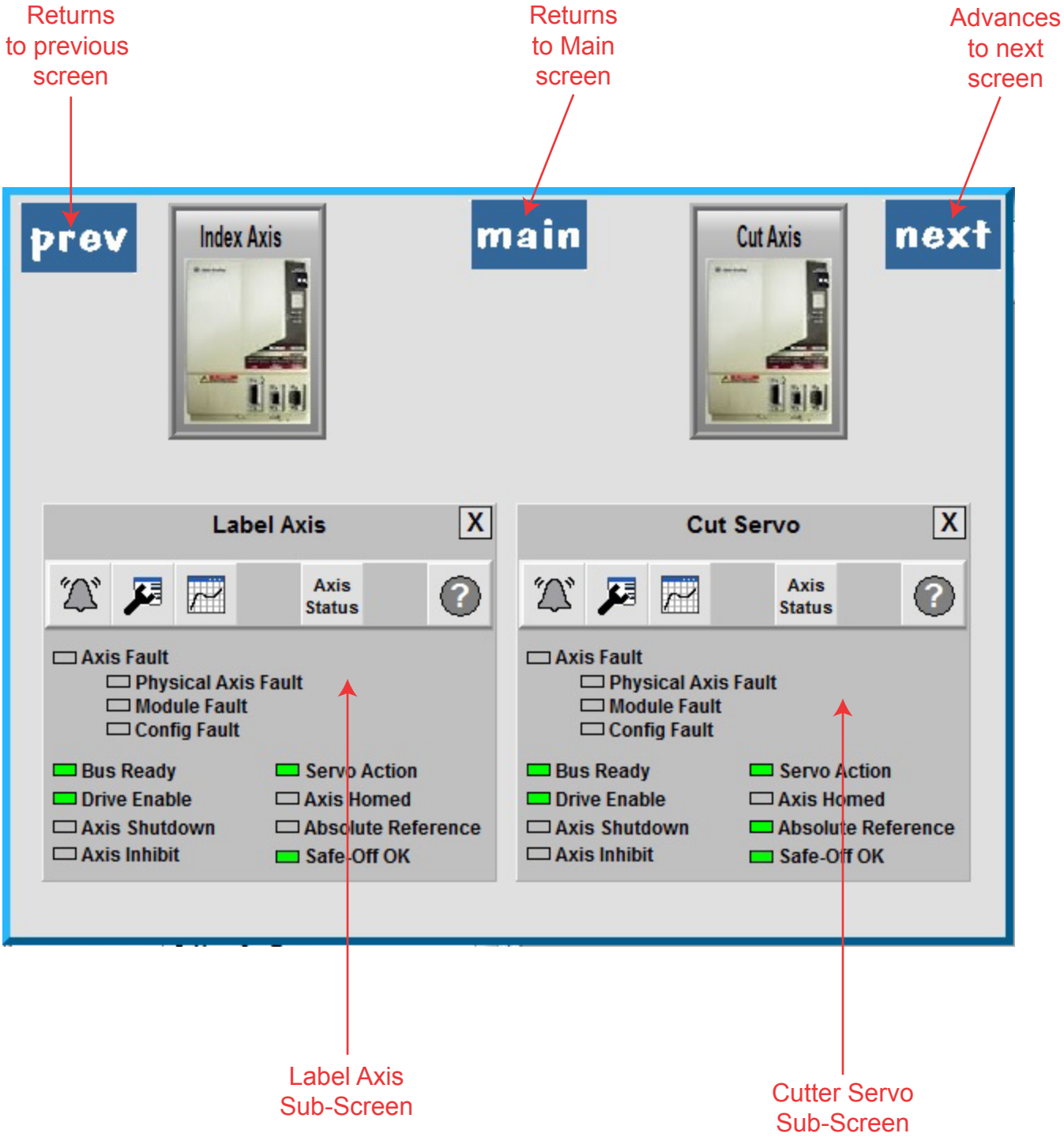

6.6 Controls Screen

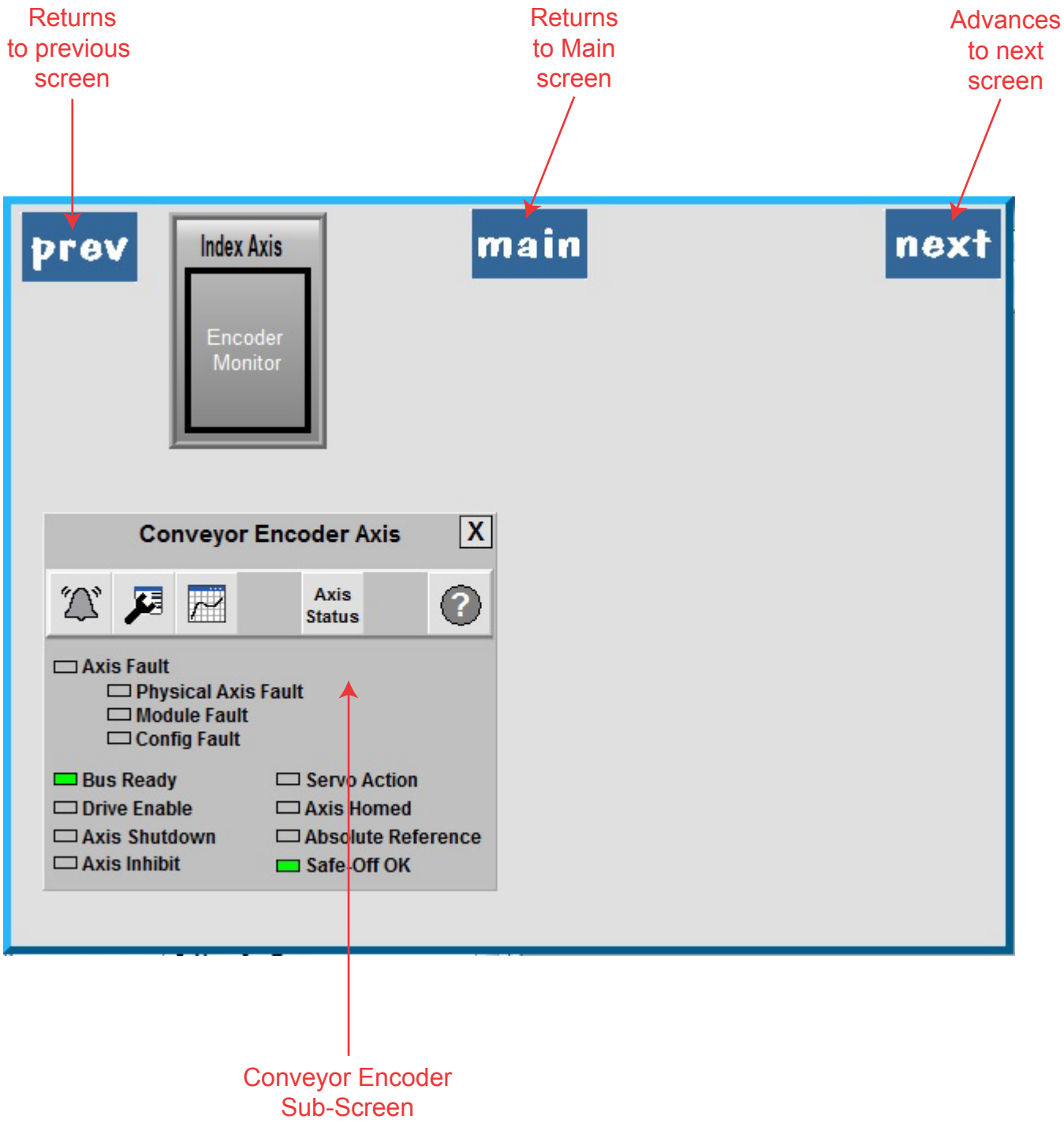

6.6 Controls Screen

Returns to previous screen

Advances to next screen

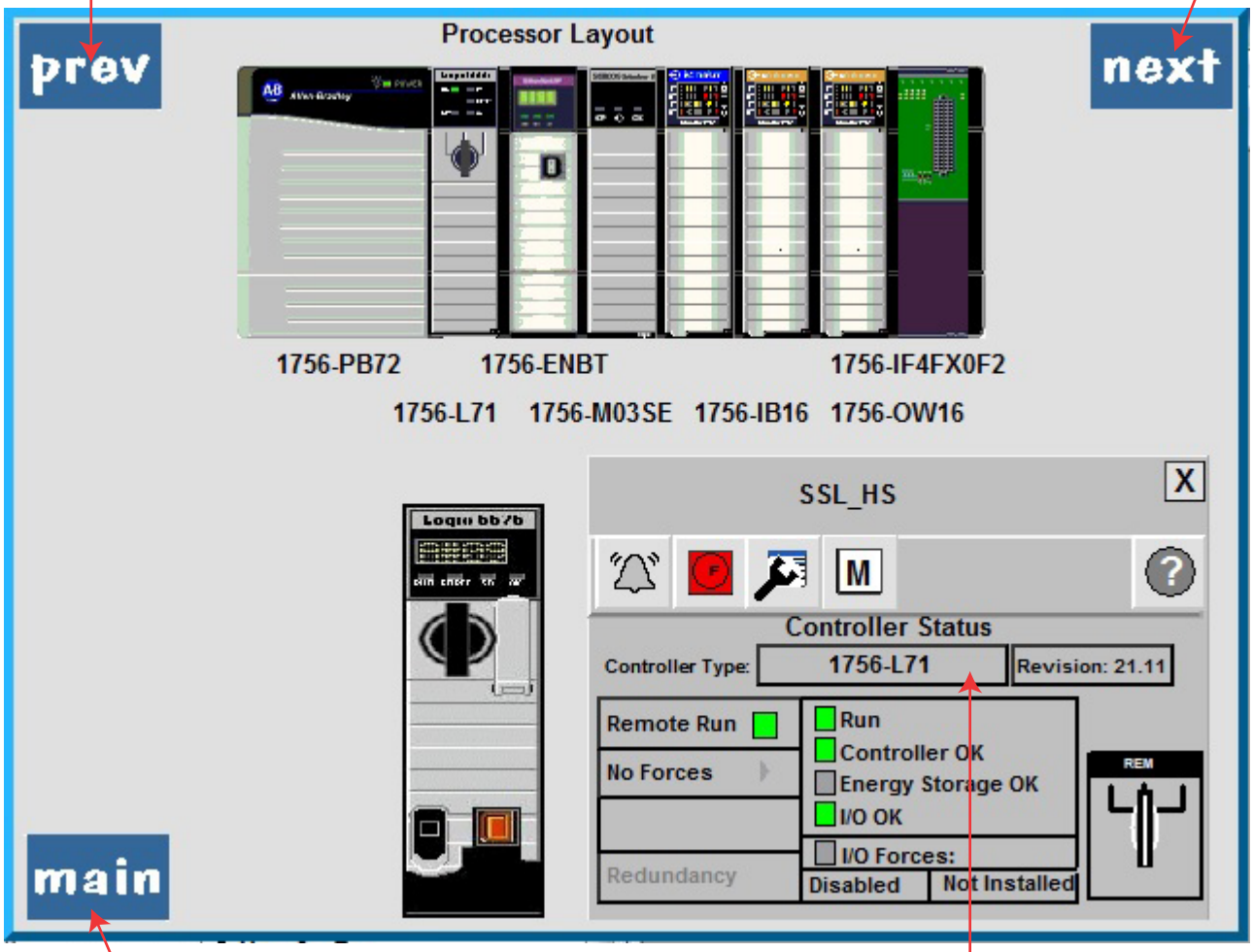

Returns to Main screen

Controller Sub-Screen

6.7 Controls Screen

Returns to previous screen

Advances to next screen

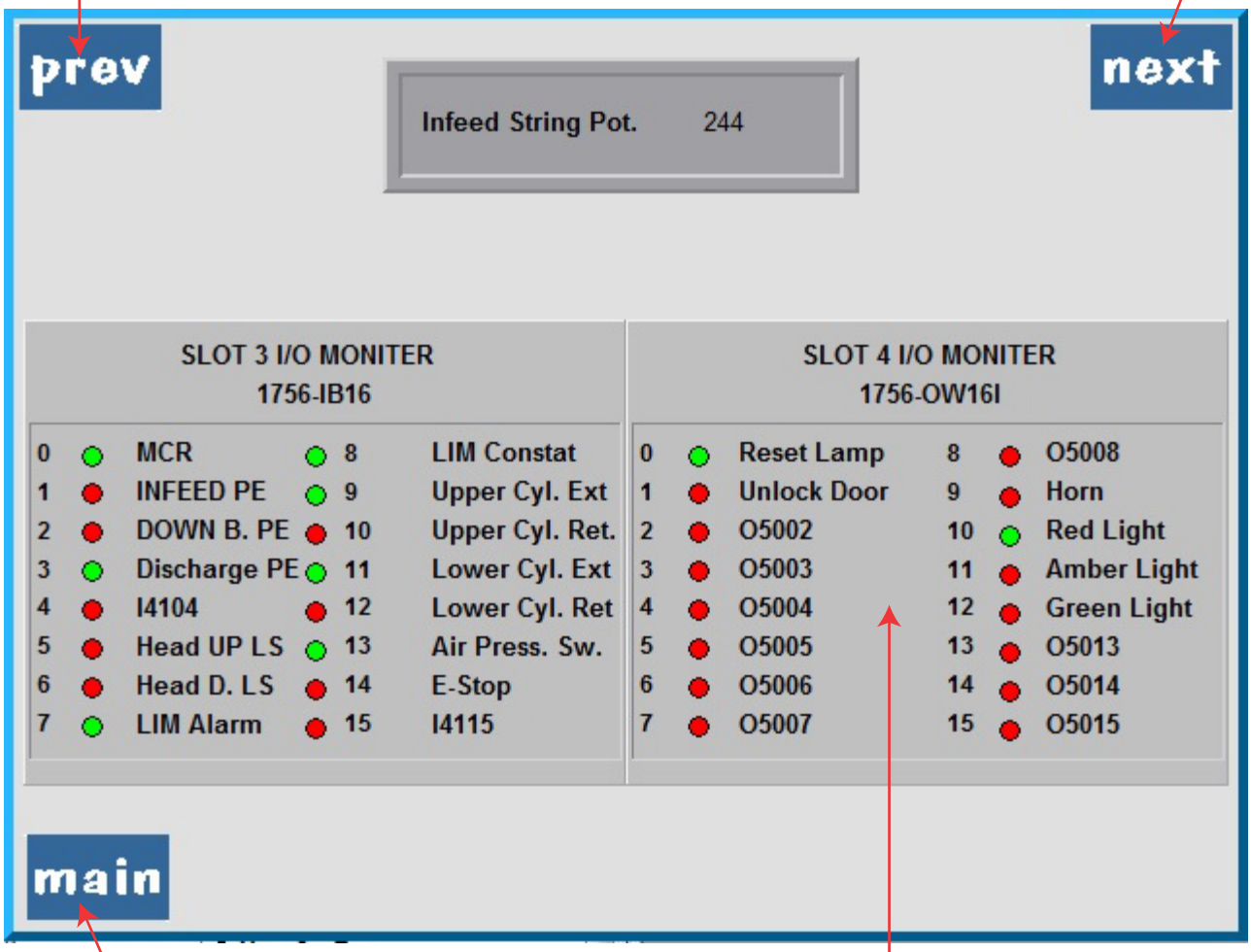

Returns to Main screen

Sensor Sub-Screen

6.8 Controls Screen

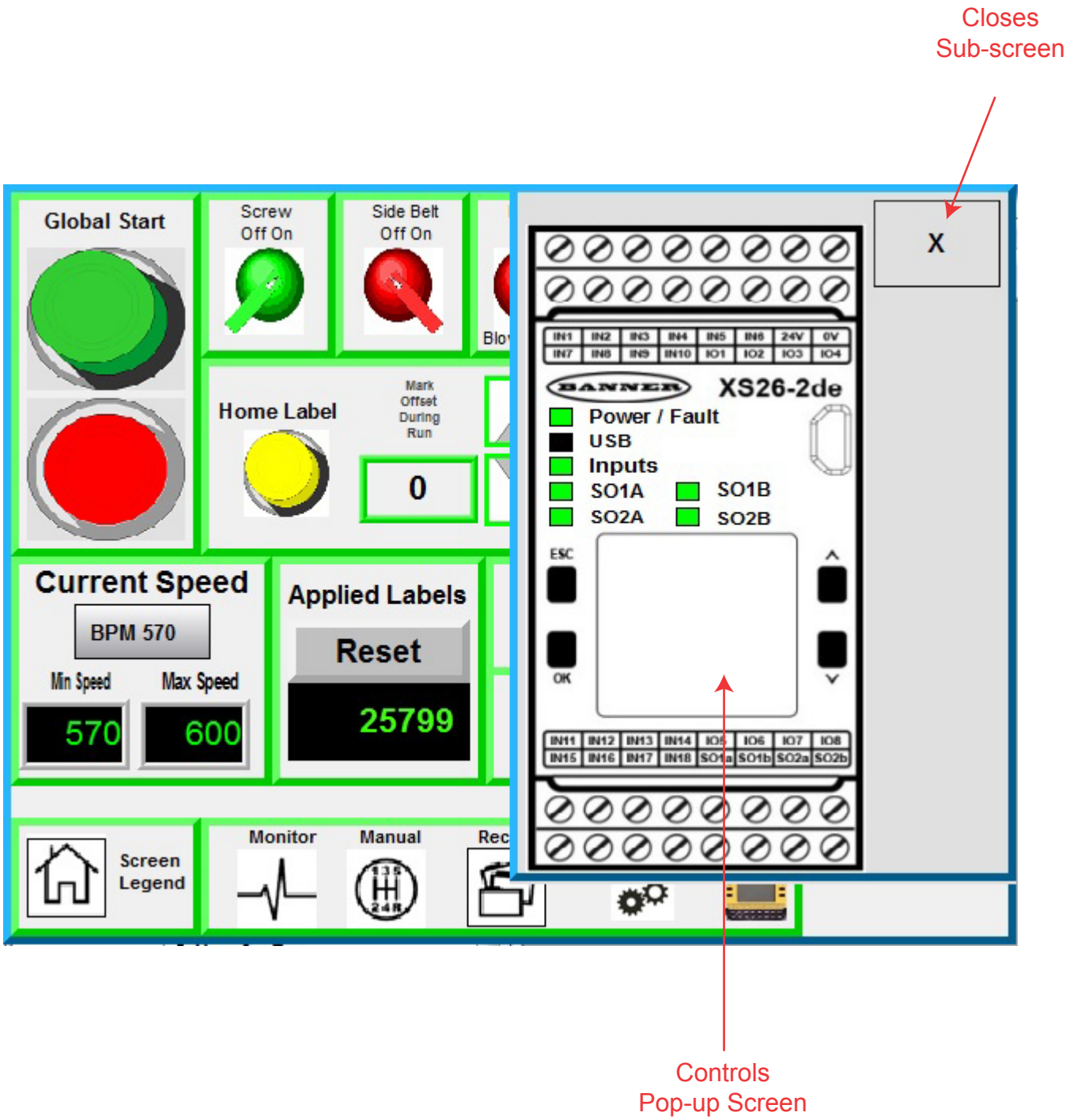

6.9 Recipe Screen

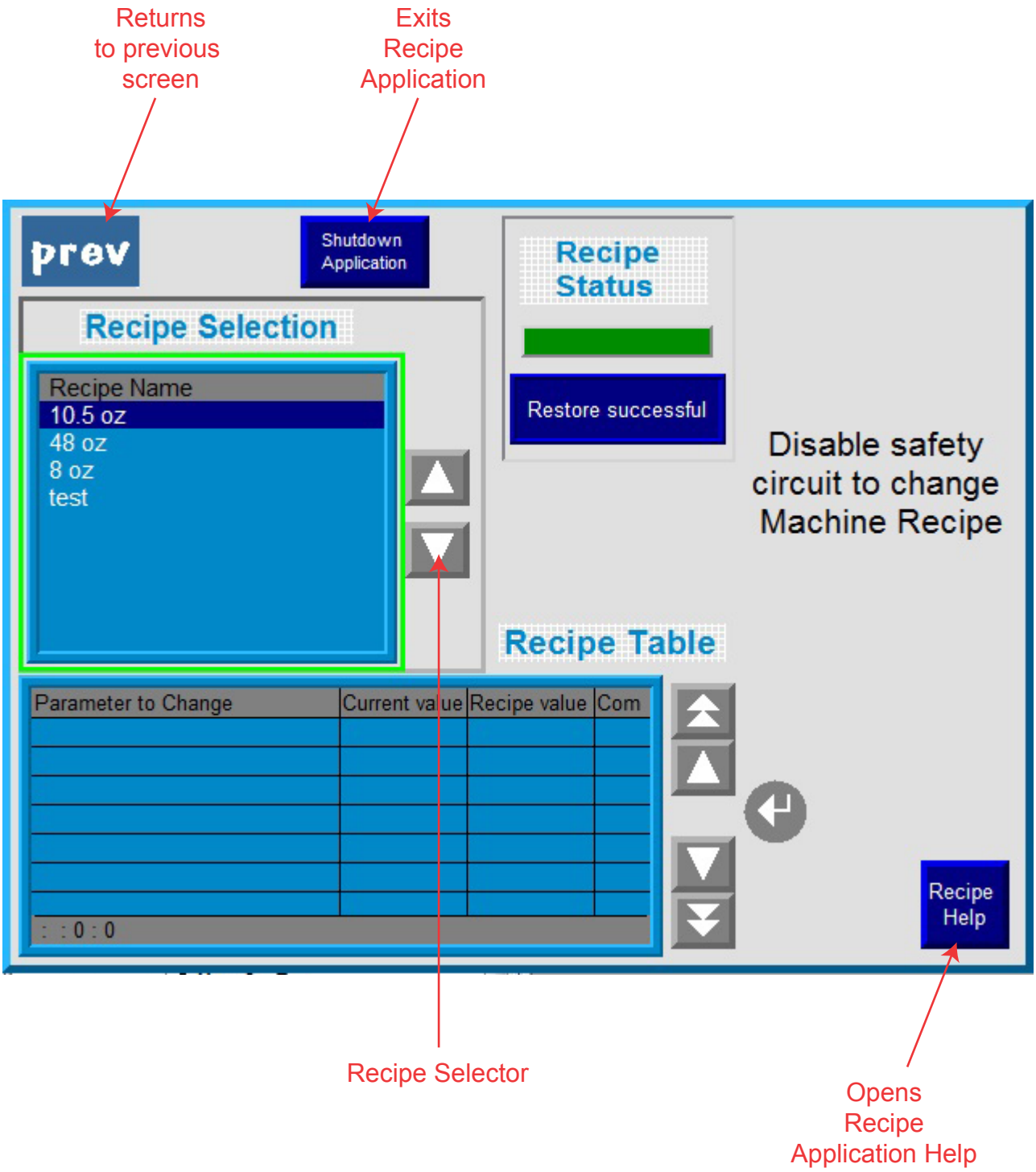

6.10 Warning Screen

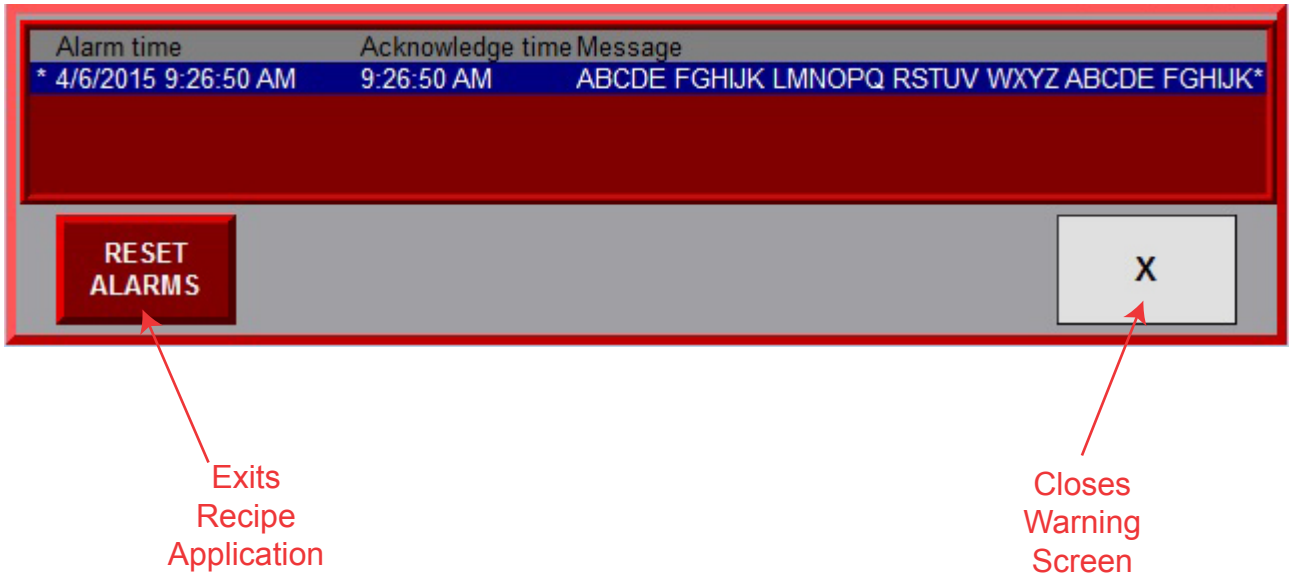

7.4 Label Sensor Section

This is a view of the controls dedicated to the Label Sensor section of the labeling machine and their relationship to one another. *See image below*

1. Label Registration Sensor Up/Down Adjuster
2. Label Registration Sensor In/Out Adjuster

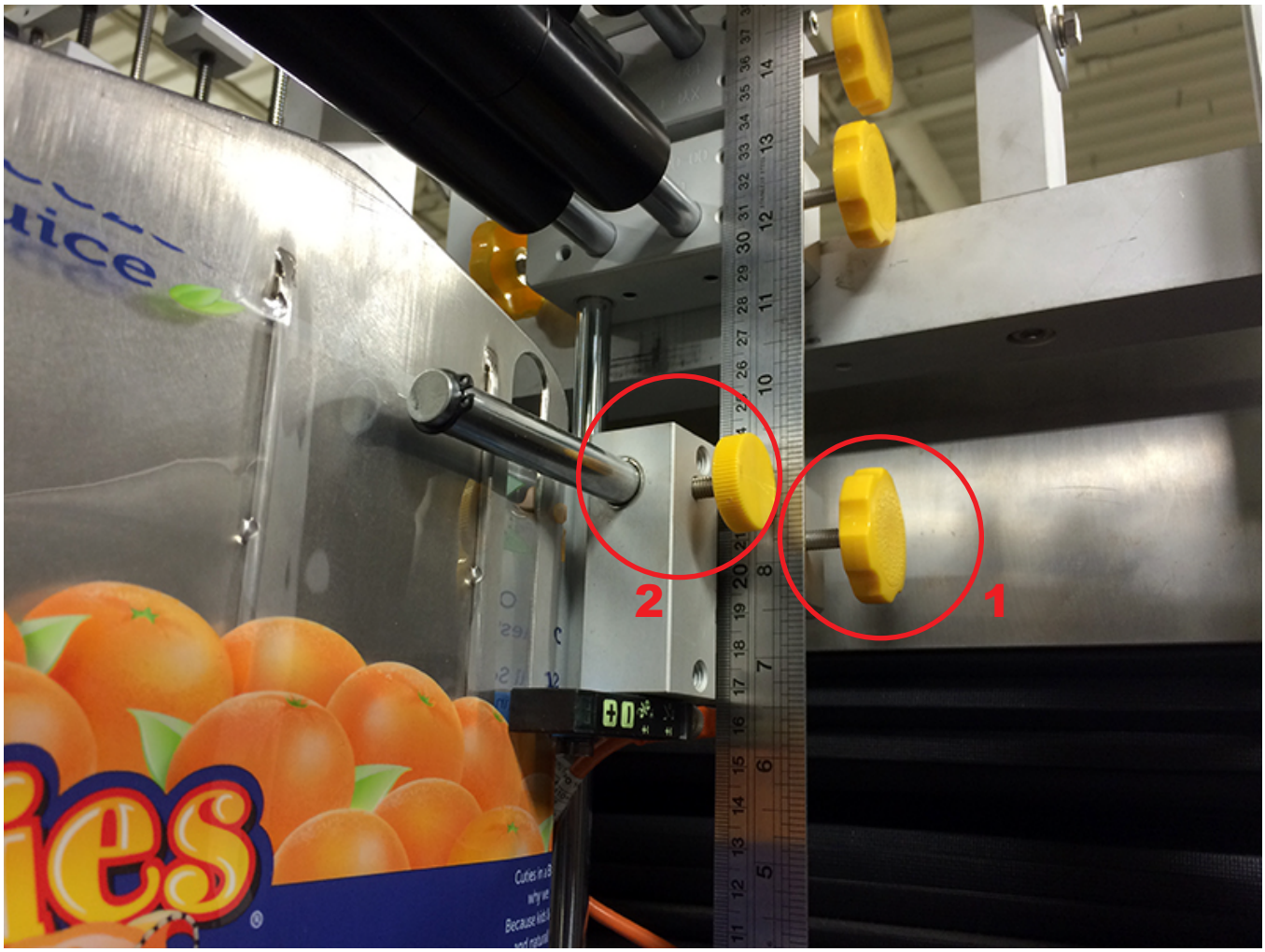

7.4 Infeed Motor

This is a view of the controls dedicated to the Infeed Motor of the labeling machine and their relationship to one another. *See image below*

1. Infeed Motor Roller Film Tension Adjuster

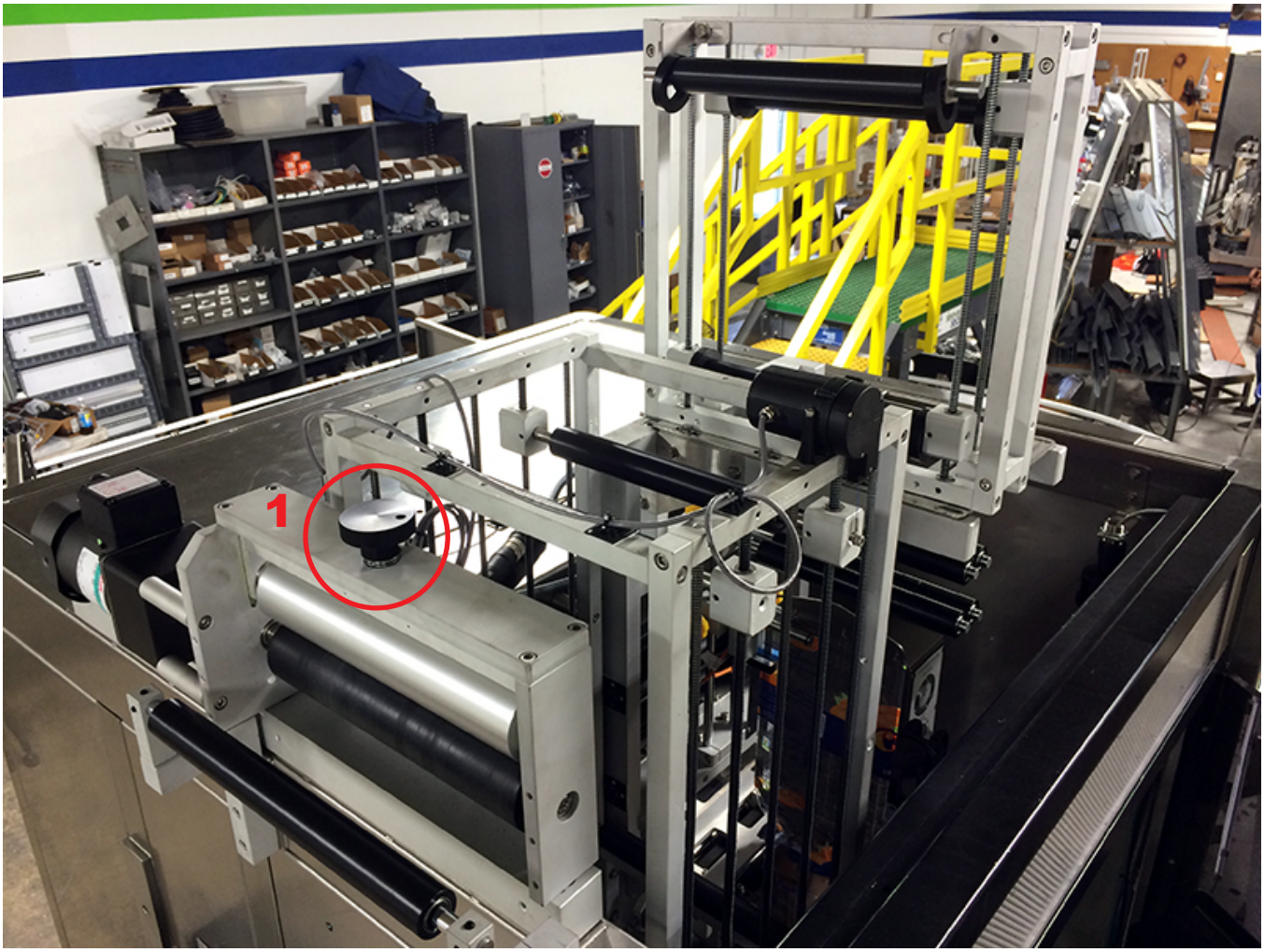

7.2 Hugger Belt Section

This is a view of the controls dedicated to the Hugger Belt section of the labeling machine and their relationship to one another. *See image below*

1. Hugger Belt Section In/Out Adjuster
2. Hugger Belt Section Up/Down Adjuster

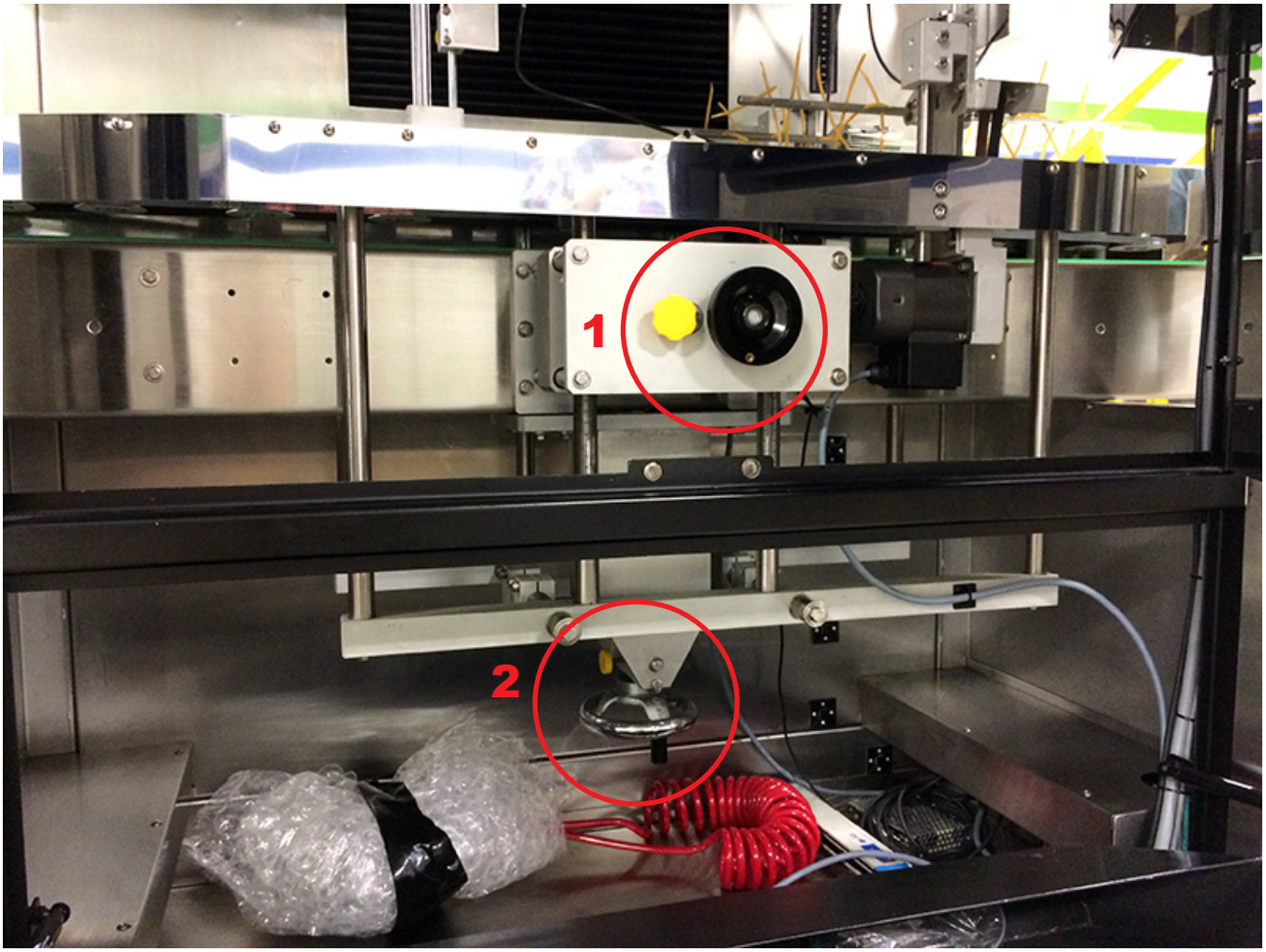

7.3 Label Sensor Section

This is a view of the controls dedicated to the Label Sensor section of the labeling machine and their relationship to one another. *See image below*

1. Label Sensor Section Left/Right Adjuster
2. Label Sensor Section Up/Down Adjuster
3. Label Reflector Left/Right Adjuster

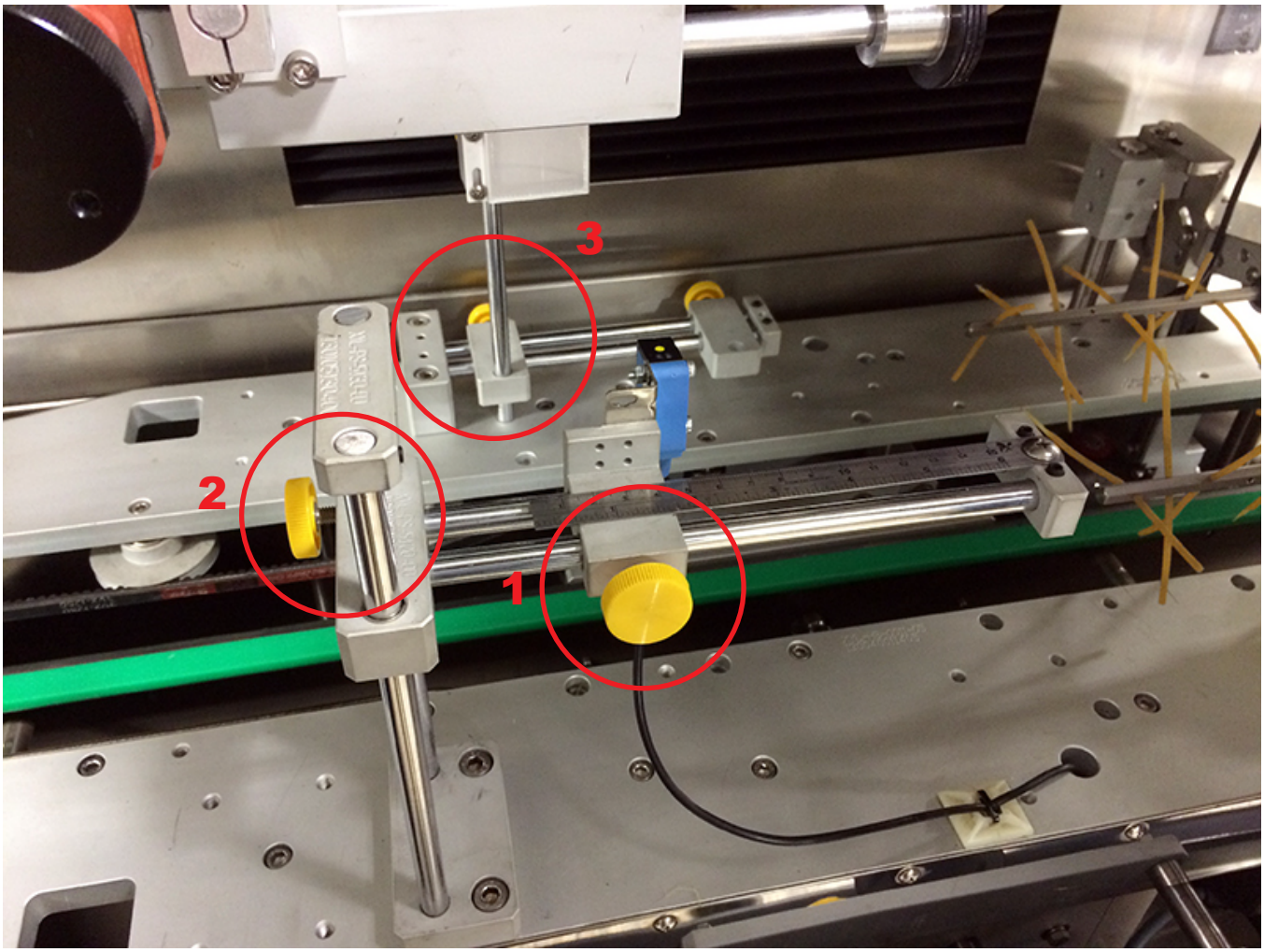

7.4 Drive Section

This is a view of the controls dedicated to the Drive Section of the labeling machine and their relationship to one another. *See image below*

1. Upper Drive Roller Pneumatic Pressure Gauge
2. Upper Drive Roller Pneumatic Pressure Adjuster
3. Upper Drive Roller Pneumatic Pressure On/Off Switch
4. Upper Drive Roller Pneumatic Pressure Gauge
5. Upper Drive Roller Pneumatic Pressure Adjuster
6. Upper Drive Roller Pneumatic Pressure On/Off Switch

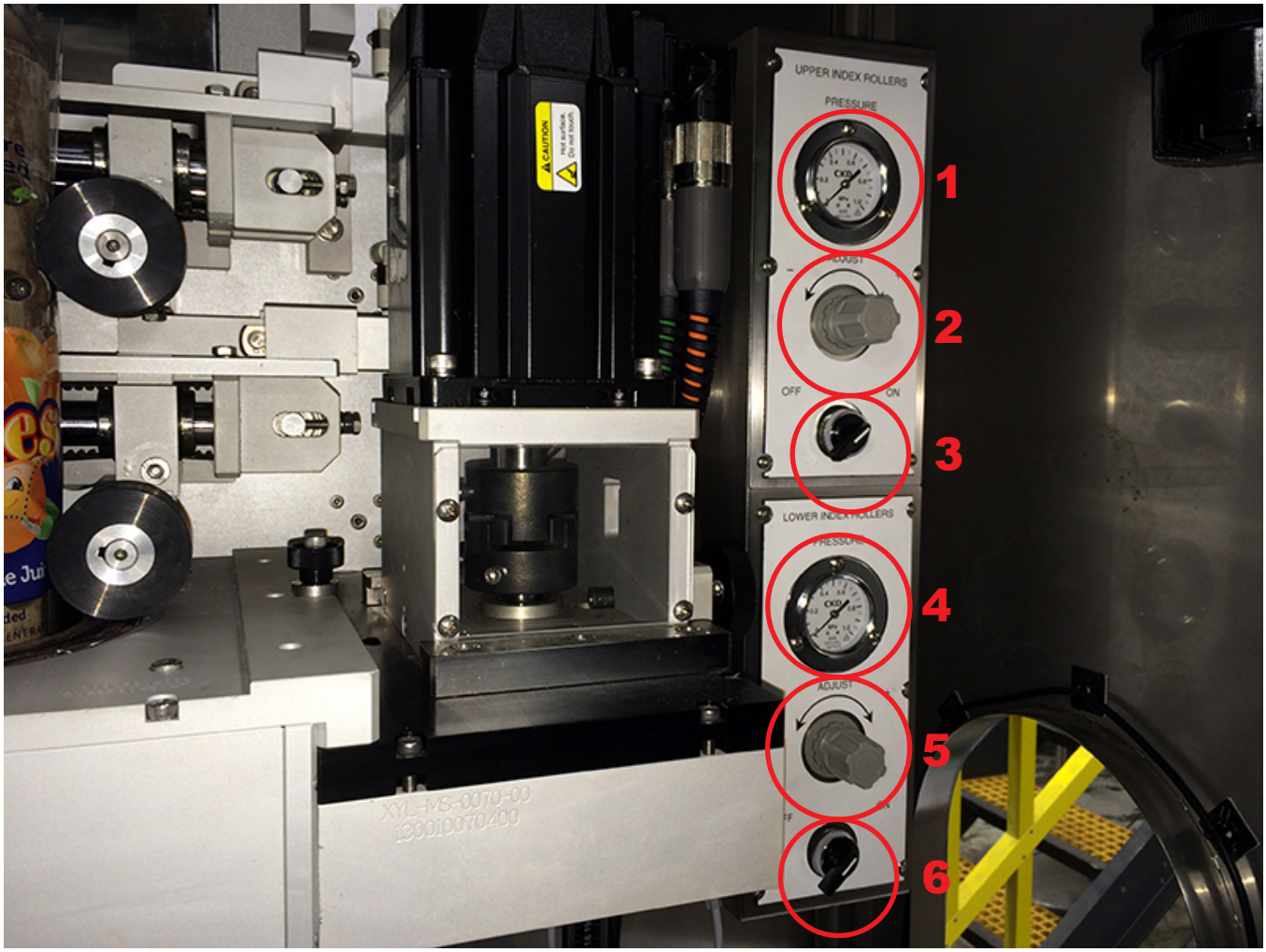

7 Adjustments

7.1 Main Adjusters

This is a view of the controls dedicated to the Main Section of the labeling machine and their relationship to one another. *See image below*

1. Sleeve Propellant Section Up/Down Adjuster
2. Label Sensor Adjusters
3. Upper Drive Section Roller Adjustment
4. Lower Drive Section Roller Adjustment
5. Sleeve Propellant In/Out Adjuster

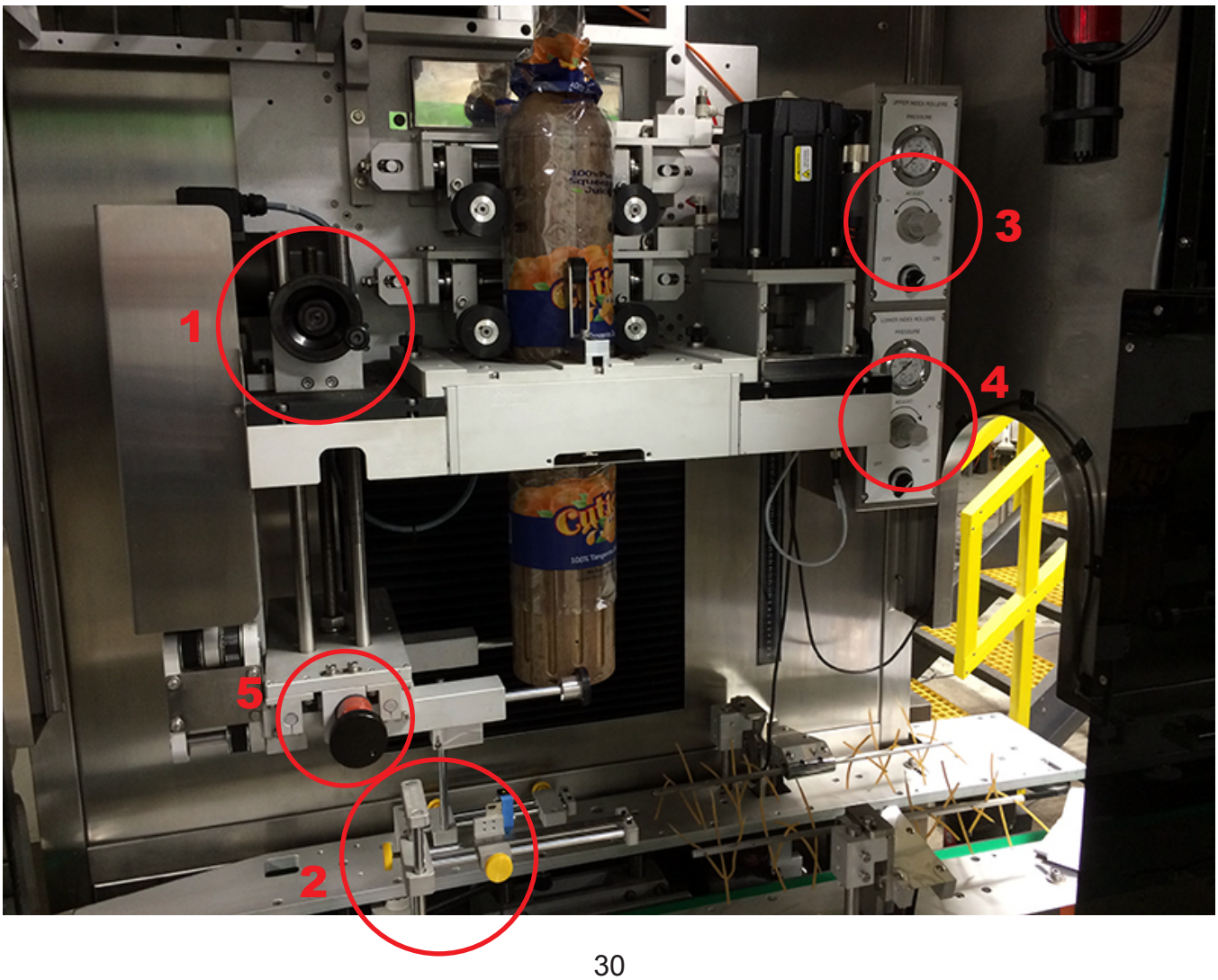

8 Trouble Shooting

8.1 Trouble shooting by location of problem

Label	Q: Is the label lay flat sufficient to fit over the container? Q: Is the label thickness accurate? A: Measure the label and change roll if needed.
Bottle	Q: Are the bottles deformed? A: Visually assess and remove deformed containers. Q: Do the containers match the label? A: Change containers.
Conveyor Motor	Q: Is the conveyor motor sufficient in HP for the conveyor? A: Check motor specifications. Q: Does the rate of reducer match the speed of production line? A: Contact Sleeve Seal if speed is insufficient.
Conveyor Chain	Q: Is there too much sag in the chain? A: Inspect chain, adjust if slack. Q: Does the belt fit properly in the carry way track? A: Inspect chain, replace if worn.
Conveyor Frame	Q: Is the inside of the conveyor frame free of interferences? A: Check that the return path is clear of screws. Q: Are the return rollers in good working order? A: Check that the return rollers are straight.
Feed Screw	Q: Is the container unstable when in the feed screw? A: Adjust the screw vertically to stabilize the container (the proper height range is between 5~8mm). Q: Does the RPM of the feed screw match the conveyor speed and match the speed indicated on the touch screen? A: Contact SleeveSeal if a problem exists.
Insert Section	Q: Are both insert wheels touching the mandrel bearings? A: Check that the mandrel is installed squarely. Q: Are the insert wheels and mandrel bearings in line? A: Move insert wheels in line. Q: Are the insert wheels spinning? A: Check that the insert drive belt is properly engaged.

9 Lubrication and Maintenance

Note: Always turn off the labeler before performing the maintenance tasks

The maintenance in this section should only be performed by properly trained maintenance personnel. Regular maintenance and lubrication will maximize the life span of the labeler.

9.1 Lubrication Schedule - *Refer to chart below and pages 22-23 for areas to be lubricated*

Lubrication for certain components are scheduled weekly, monthly, biannually, and annually. Machine gears and bearings require a period to bed in naturally during run-in, i.e. in the first 300 hours of service.

9.2 Should a component begin to rust, immediately clean the part and inspect for damage. If undamaged, re-lubricate. If damaged, replace the part.

9.3 Do not set or store anything on or above the conveyor.

9.4 Check belts and pulleys weekly for signs of wear. Keep spare belts ready.

Item	Weekly	Monthly
Machine	Lubrication as needed	Lubrication as needed
Mandrel	Surface inspection and cleaning	Bearing inspection
Insert Section	Rubber wheel inspection	Rubber wheel inspection
Drive section	Rubber wheel inspection	Rubber wheel inspection
Cutter Box	Blade inspection	Blade change, bearing and belt inspection
Conveyor	Belt inspection	Belt adjustment
Motor		Gear box inspection
Hugger Belt	Belt inspection	Belt adjustment
Label Tension Assembly	Linear slider inspection	Linear slider inspection
Label Accumulation Cabinet	Surface inspection and cleaning	Brake system inspection

Item	Biannually	Annually
Machine		
Mandrel	Bearing replacement	Bearing replacement
Insert Section	Belt inspection	Gear and bearing check
Drive section	Bearing inspection	Gear and bearing check
Cutter Box	Gear inspection	Bearing check
Conveyor	Bearing inspection	
Motor	Function test	Function test
Hugger Belt		Belt replacement
Label Tension Assembly		
Label Accumulation Cabinet	Brake system inspection	

* Sleeve Seal suggests frequent inspection and maintenance for all labeling machines. The guidelines shown here may vary with application of each machine.

9.5 Lubrication Points

All gears, slides and tracks should be lubricated on a regular schedule. Do not lubricate rubber belts or belt pulleys.

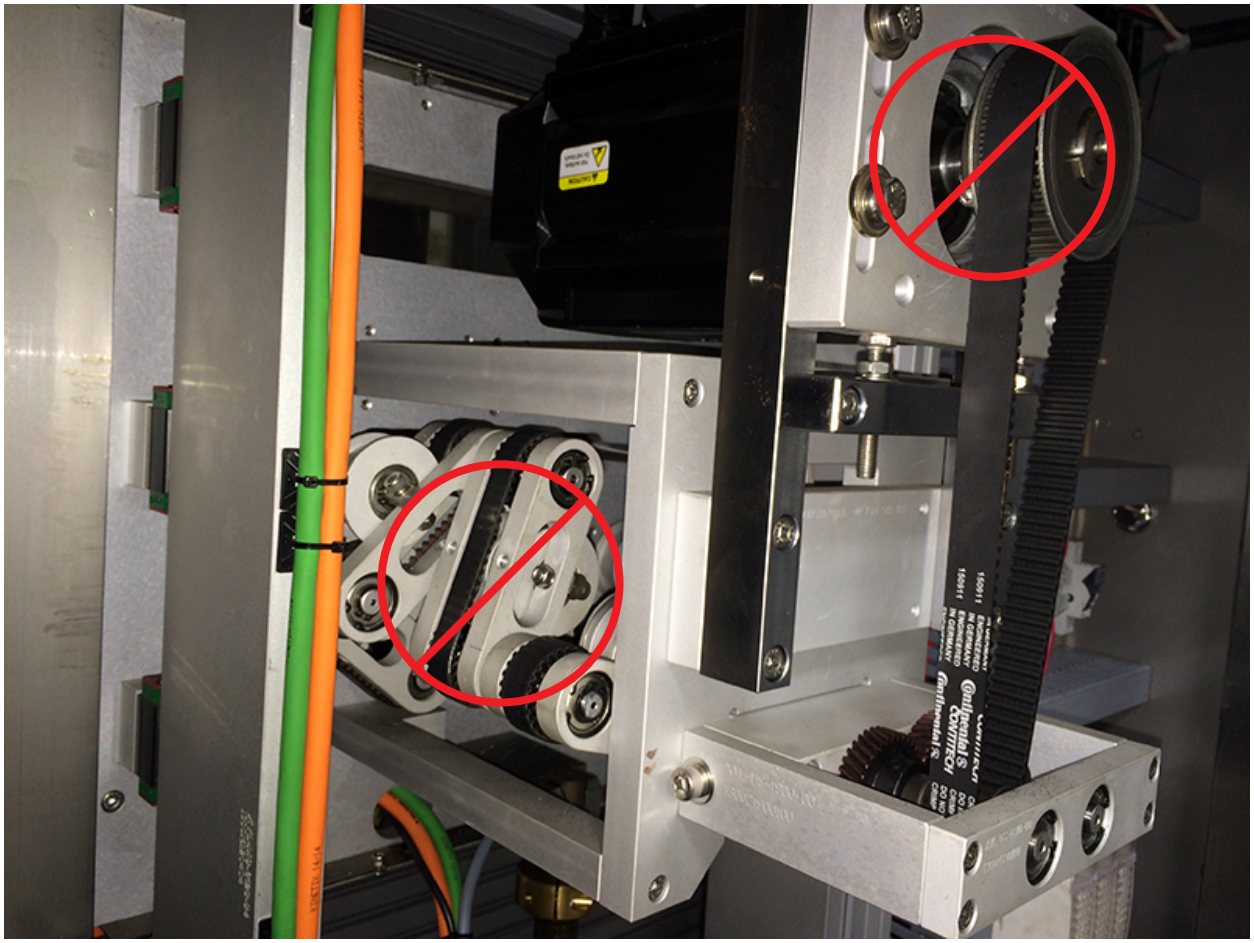

9.5 Lubrication Points

All gears, slides and tracks should be lubricated on a regular schedule. Do not lubricate rubber belts or belt pulleys.

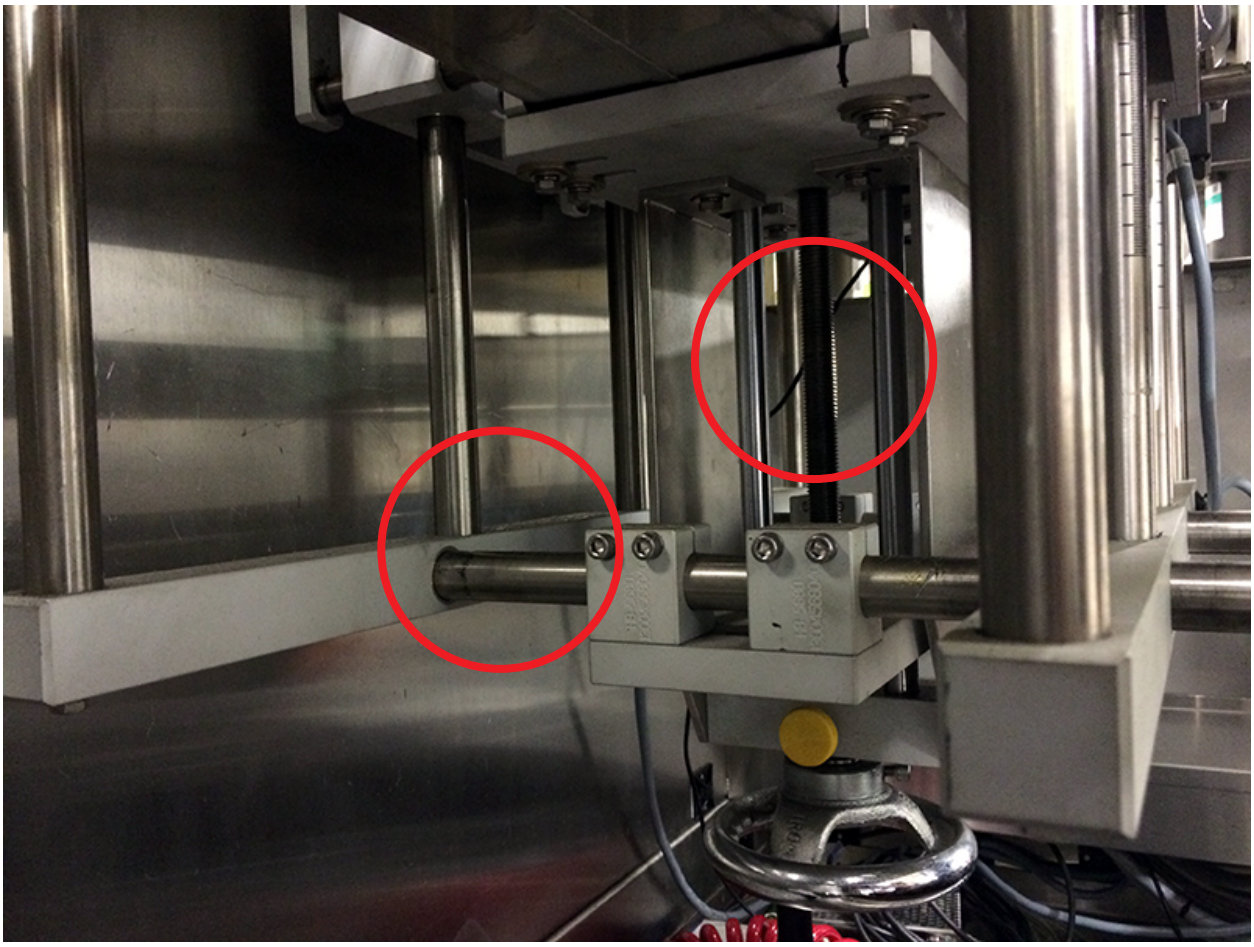

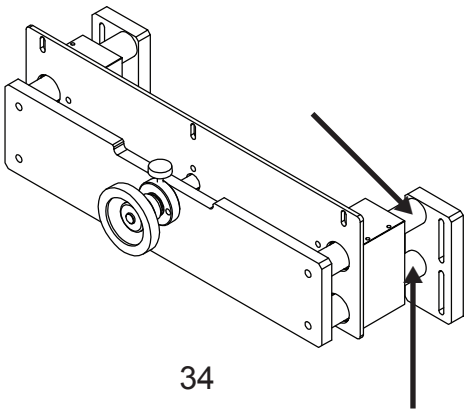

9.5 Lubrication Points

All gears, slides and tracks should be lubricated on a regular schedule. Do not lubricate rubber belts or belt pulleys.

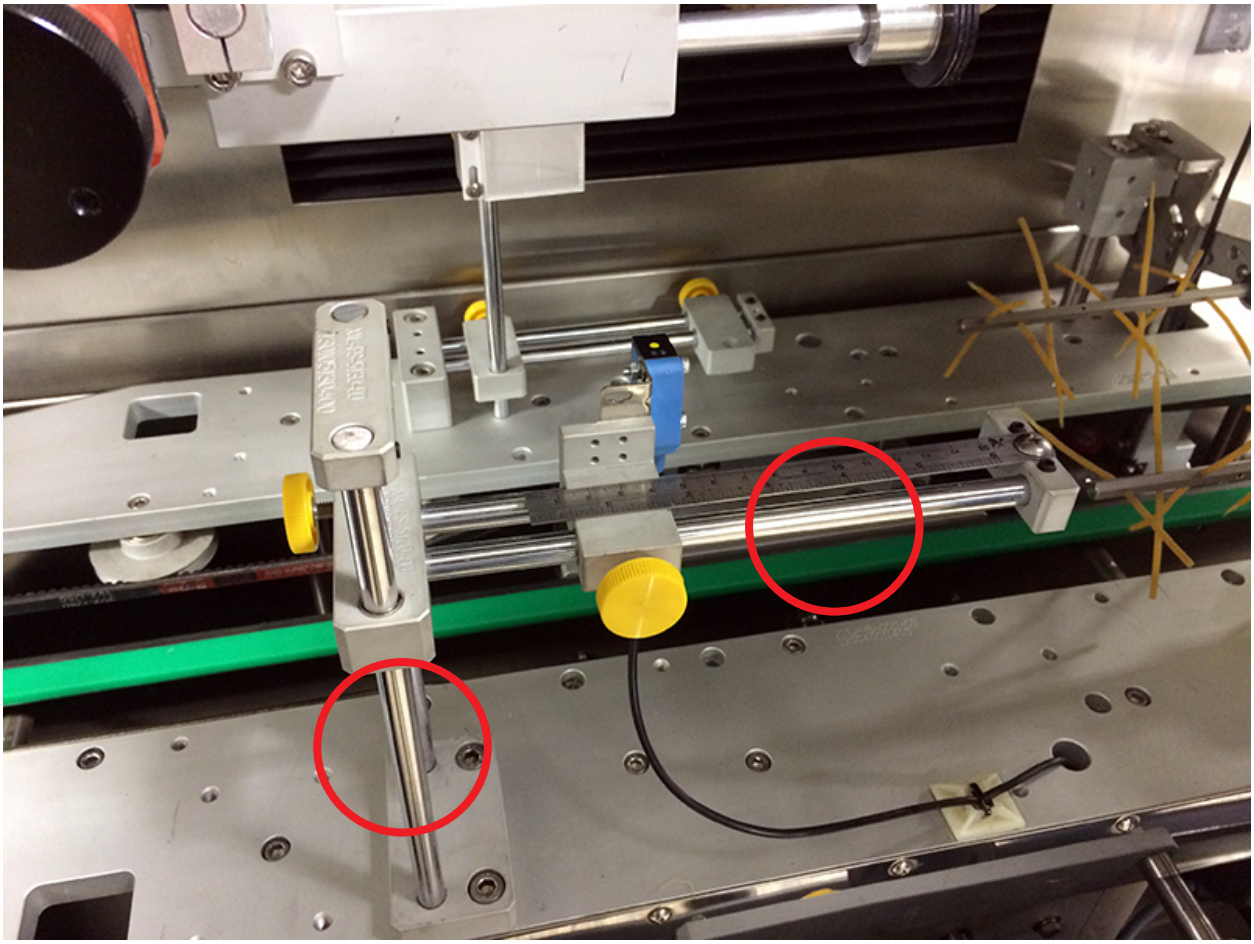

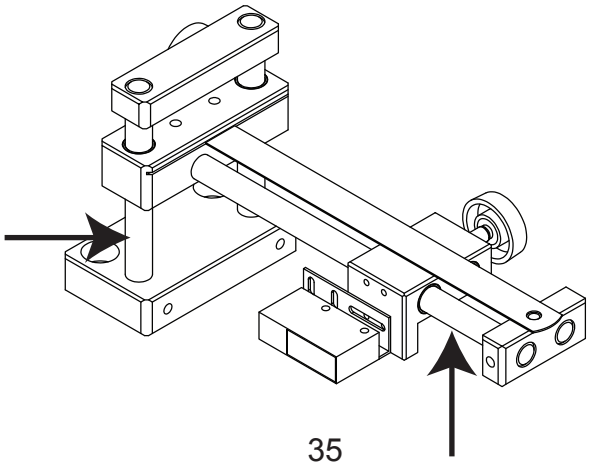

9.5 Lubrication Points

All gears, slides and tracks should be lubricated on a regular schedule. Do not lubricate rubber belts or belt pulleys.

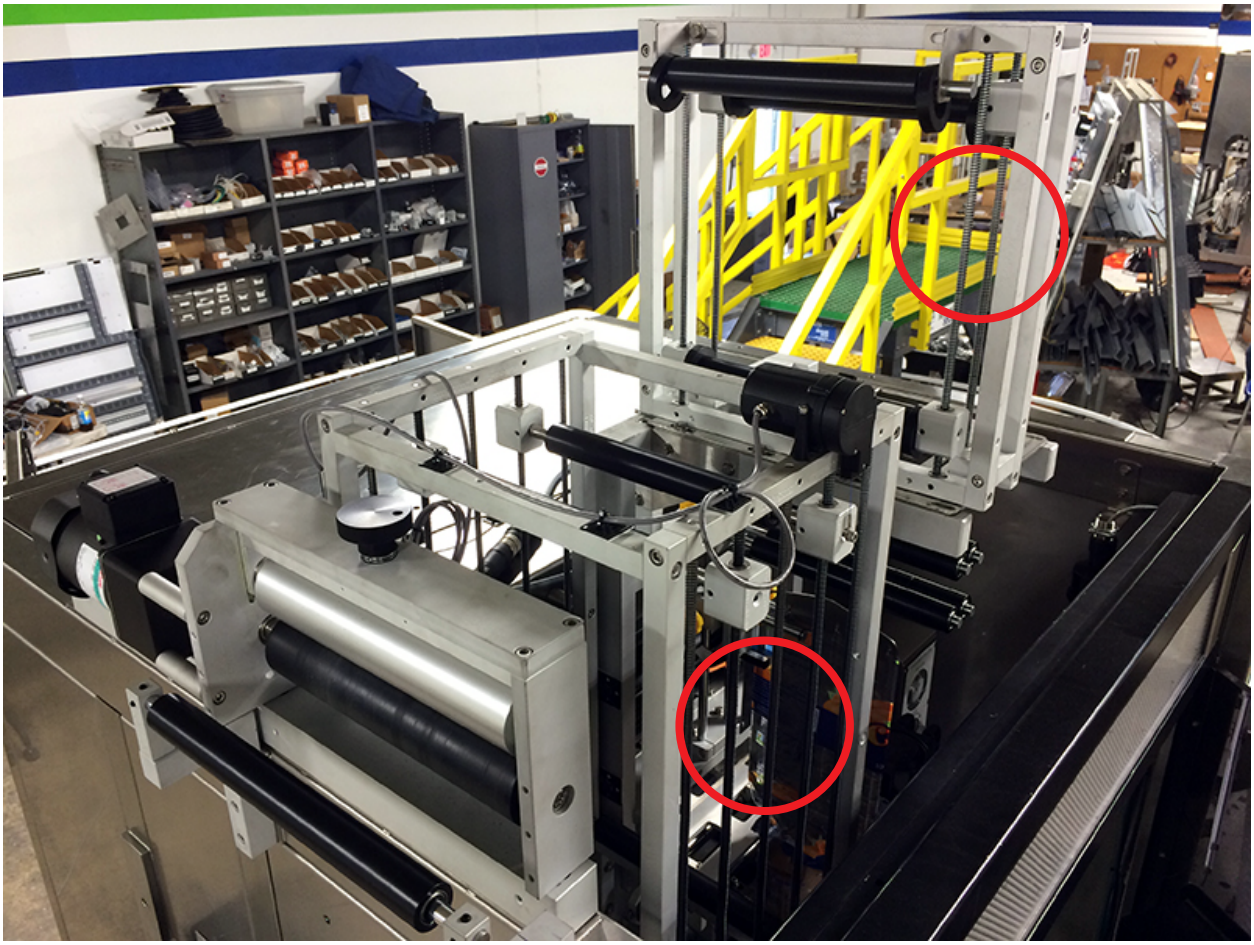

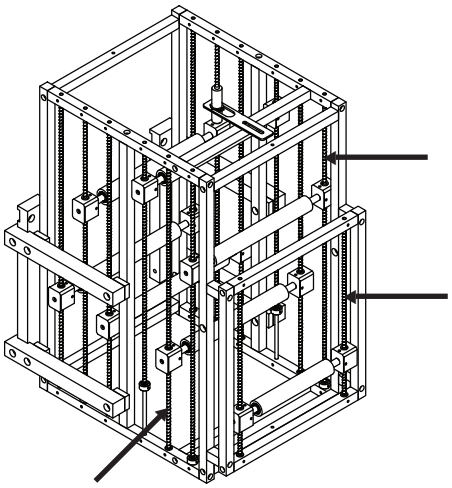

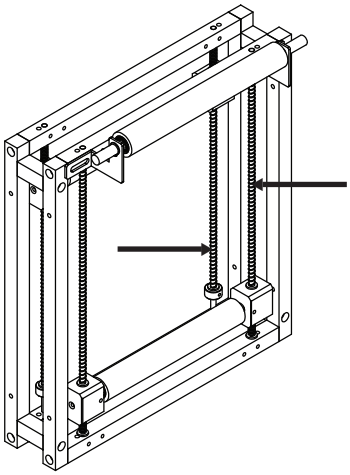

9.5 Lubrication Points

All gears, slides and tracks should be lubricated on a regular schedule. Do not lubricate rubber belts or belt pulleys.

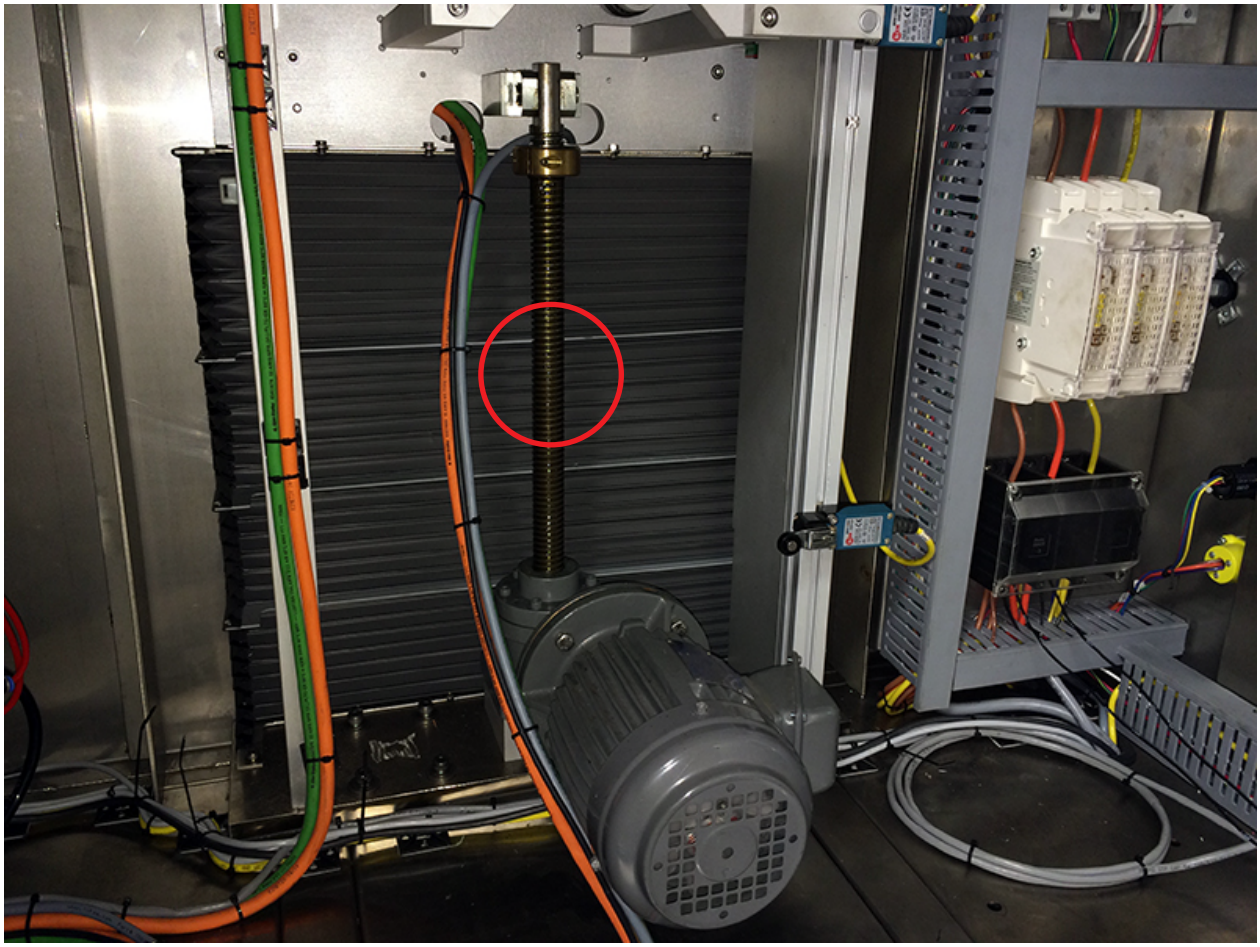

10 Electrical

10.1 Electrical Safety

Always follow electrical safety procedures. All maintenance done on machine should be performed with the power off or diconnected. Any electrical work on machine should be performed by a certified electricia.n.

10.2 Electrical Drawings

Refer to attached detailed electrical schematics and drawings.

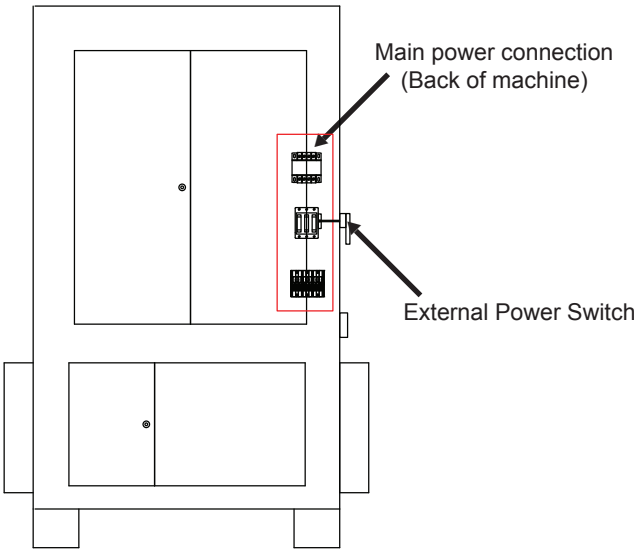

Sleeve Seal

SSL-600I

Wiring Schematics

Blue Marble

A B C D E F G H

1 2 3 4 5 6 7 8 9 10 11 12 13 14

NOTES

1.
2.
3.
4.
5.

This Product is Listed by
UNDERWRITERS LABORATORIES, INC.
and Bears the Mark:

c UL us

LEGEND

- POWER TERMINAL, 600V
- GROUNG TERMINAL, 600V
- CONTROL TERMINAL, 600V
- FUSED TERMINAL, 300V
- NUMBERED CONTROL WIRE
- WIRE IN ENCLOSURES
- OTHER WIRING

sleeve seal

SCALE: NONE | DRAWN BY: GG

DATE: 7/15/20 | APP.

This drawing is the property of Sleeve Seal, LLC Inc. It is loaned upon the express condition that it shall not be copied or reproduced in any manner, that it shall not be submitted to others for examination without the consent of this company, that it shall not be used in any other way detrimental to the interest of Sleeve Seal LLC Inc., and that it shall be returned upon demand.

TITLE:

SSL-600I
Blue Marble
Indianapolis, IN

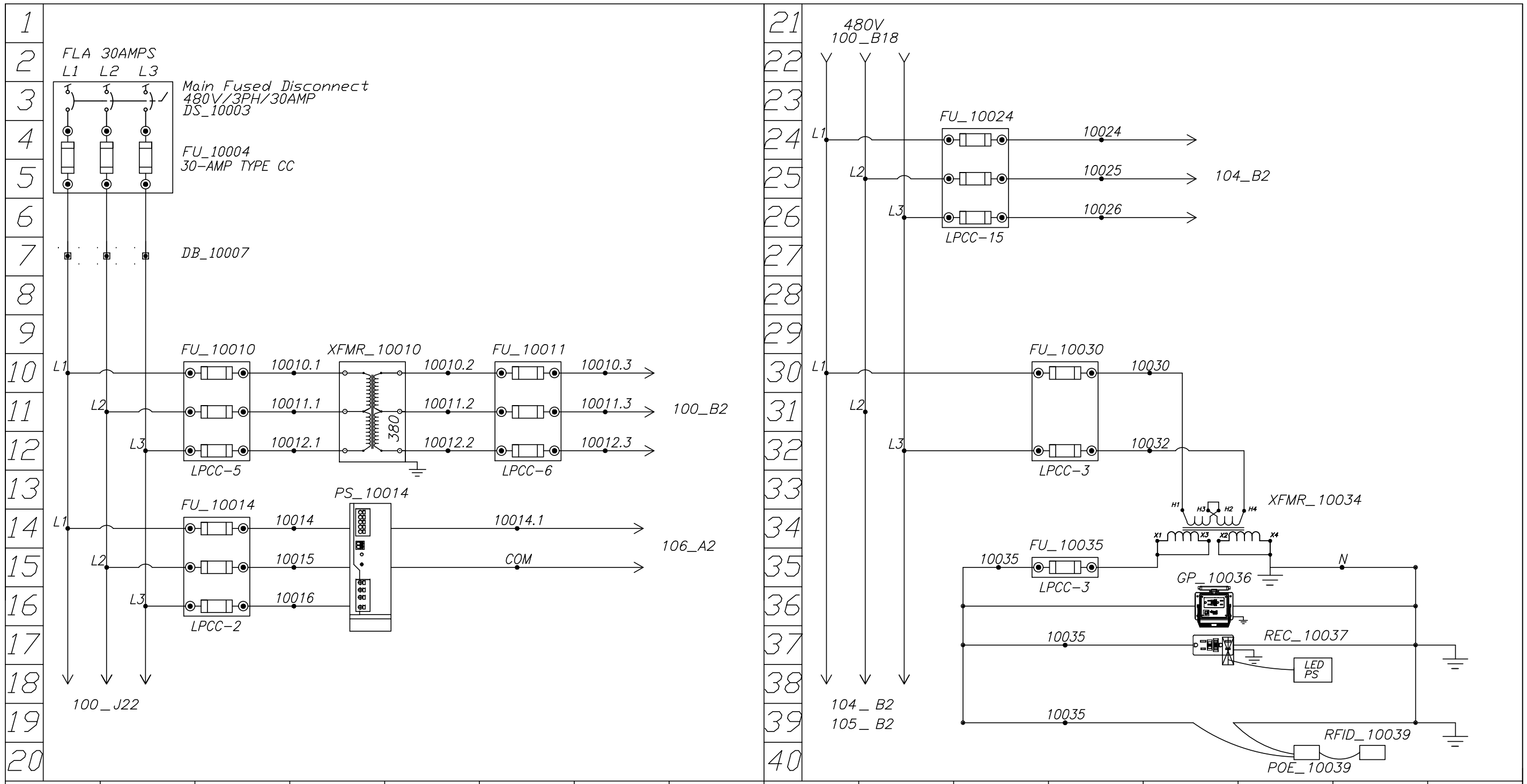

NOTES

1. 480V POWER WIRING IS BROWN,ORANGE,YELLOW
2. 220V POWER WIRING IS BLACK
3.
4.
5.

This Product is Listed by UNDERWRITERS LABORATORIES, INC. and Bears the Mark:

c UL us

LEGEND

- POWER TERMINAL, 600V
- CONTROL TERMINAL, 600V
- FUSE
- NUMBERED WIRE
- WIRE IN ENCLOSURES
- OTHER WIRING

sleeve seal

SCALE: NONE | DRAWN BY: GG

DATE: 7/15/20 | APP.

This drawing is the property of Sleeve Seal, LLC Inc. It is loaned upon the express condition that it shall not be copied or reproduced in any manner, that it shall not be submitted to others for examination without the consent of this company, that it shall not be used in any other way detrimental to the interest of Sleeve Seal LLC Inc., and that it shall be returned upon demand.

TITLE: 480V WIRING SSL-600i Blue Marble Indianapolis, IN

JOB# 05062010 | PAGE# 100

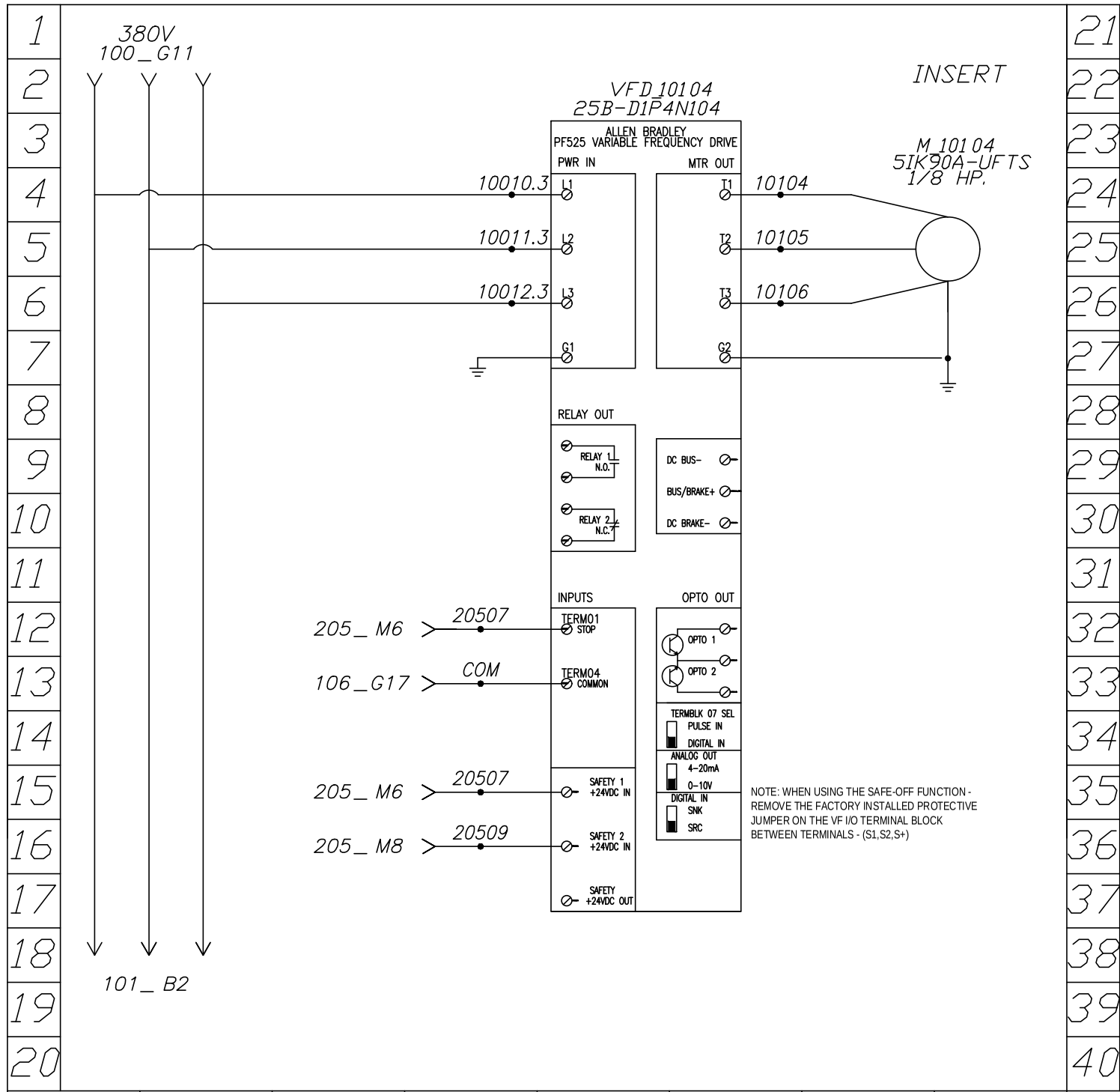

NOTE: WHEN USING THE SAFE-OFF FUNCTION - REMOVE THE FACTORY INSTALLED PROTECTIVE JUMPER ON THE VF I/O TERMINAL BLOCK BETWEEN TERMINALS - (S1,S2,S+)

THIS SPACE INTENTIONALLY LEFT BLANK

NOTES

1. 480V POWER WIRING IS BROWN,ORANGE,YELLOW
2. 220V POWER WIRING IS BLACK
3.
4.
5.

This Product is Listed by UNDERWRITERS LABORATORIES, INC. and Bears the Mark:

c(UL)us

LEGEND

- POWER TERMINAL, 600V
- CONTROL TERMINAL, 600V
- FUSE
- NUMBERED WIRE
- WIRE IN ENCLOSURES
- OTHER WIRING

sleeve seal

SCALE: NONE | DRAWN BY: GG

DATE: 7/15/20 | APP.

This drawing is the property of Sleeve Seal, LLC Inc. It is loaned upon the express condition that it shall not be copied or reproduced in any manner, that it shall not be submitted to others for examination without the consent of this company, that it shall not be used in any other way detrimental to the interest of Sleeve Seal LLC Inc., and that it shall be returned upon demand.

TITLE: 480V WIRING SSL-600i Blue Marble Indianapolis, IN

JOB# 05062010 | PAGE# 101

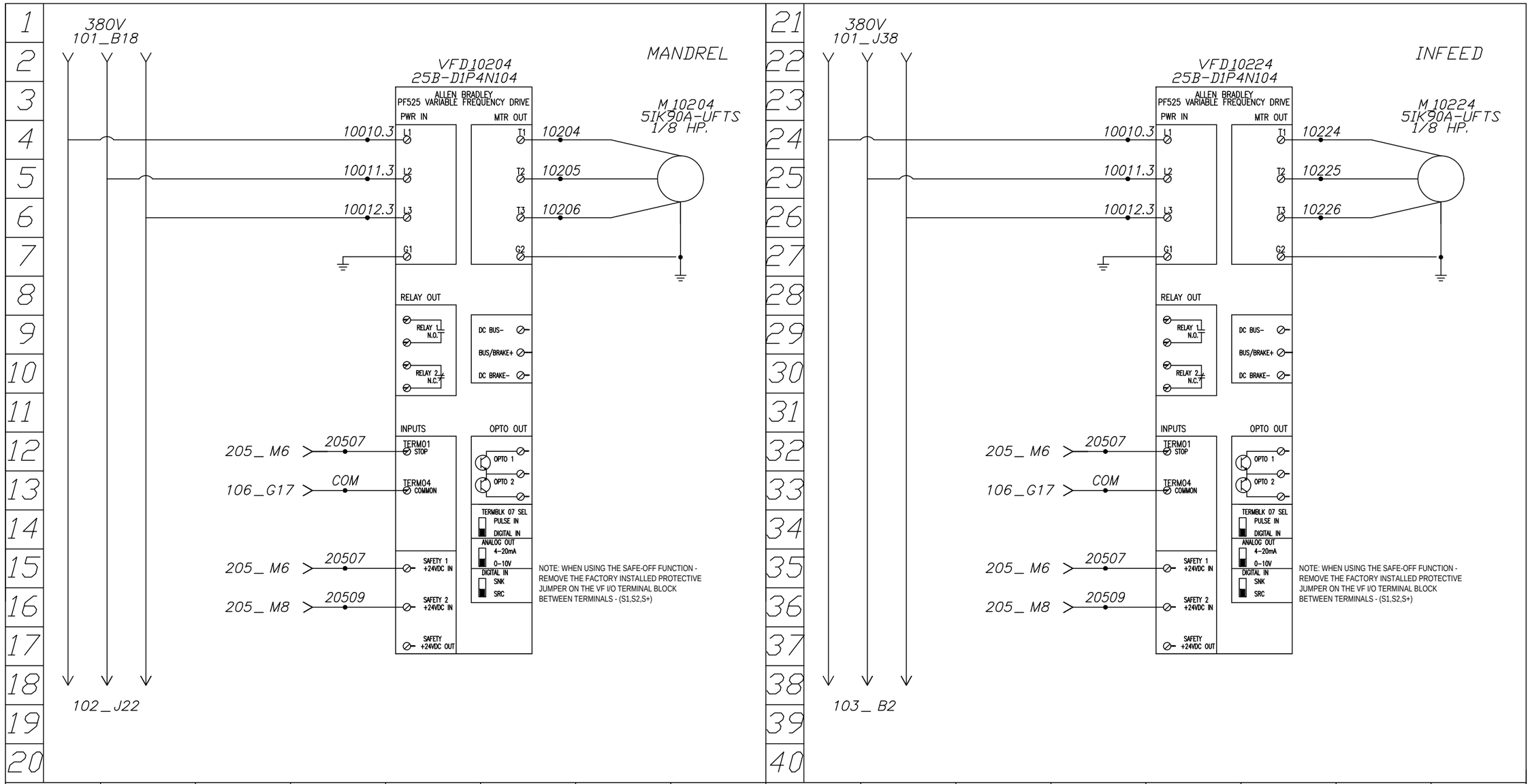

NOTES

1. 480V POWER WIRING IS BROWN,ORANGE,YELLOW
2. 220V POWER WIRING IS BLACK
3.
4.
5.

This Product is Listed by UNDERWRITERS LABORATORIES, INC. and Bears the Mark:

c(UL)us

LEGEND

- POWER TERMINAL, 600V
- CONTROL TERMINAL, 600V
- FUSE
- NUMBERED WIRE
- WIRE IN ENCLOSURES
- OTHER WIRING

sleeve seal

SCALE: NONE | DRAWN BY: GG

DATE: 7/15/20 | APP.

This drawing is the property of Sleeve Seal, LLC Inc. It is loaned upon the express condition that it shall not be copied or reproduced in any manner, that it shall not be submitted to others for examination without the consent of this company, that it shall not be used in any other way detrimental to the interest of Sleeve Seal LLC Inc., and that it shall be returned upon demand.

TITLE: 480V WIRING SSL-600i Blue Marble Indianapolis, IN

JOB# 05062010 | PAGE# 102

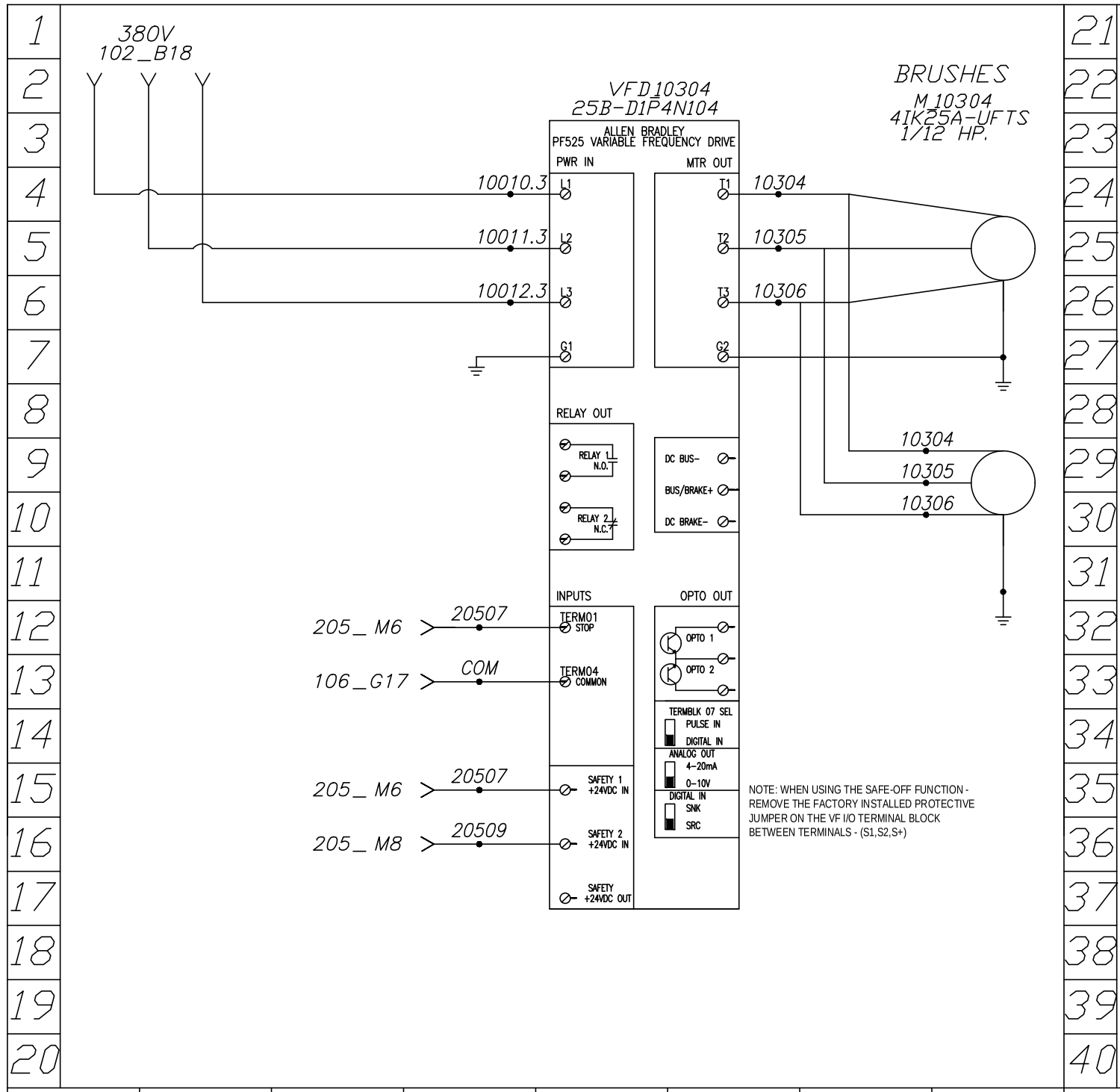

NOTE: WHEN USING THE SAFE-OFF FUNCTION - REMOVE THE FACTORY INSTALLED PROTECTIVE JUMPER ON THE VF I/O TERMINAL BLOCK BETWEEN TERMINALS - (S1,S2,S+)

THIS SPACE INTENTIONALLY LEFT BLANK

NOTES

1. 480V POWER WIRING IS BROWN,ORANGE,YELLOW
2. 220V POWER WIRING IS BLACK
3.
4.
5.

This Product is Listed by UNDERWRITERS LABORATORIES, INC. and Bears the Mark:

c UL us

LEGEND

- POWER TERMINAL, 600V
- CONTROL TERMINAL, 600V
- FUSE
- NUMBERED WIRE
- WIRE IN ENCLOSURES
- OTHER WIRING

sleeve seal

SCALE: NONE | DRAWN BY: GG

DATE: 7/15/20 | APP.

This drawing is the property of Sleeve Seal, LLC Inc. It is loaned upon the express condition that it shall not be copied or reproduced in any manner, that it shall not be submitted to others for examination without the consent of this company, that it shall not be used in any other way detrimental to the interest of Sleeve Seal LLC Inc., and that it shall be returned upon demand.

TITLE: 480V WIRING SSL-600i Blue Marble Indianapolis, IN

JOB# 05062010 | PAGE# 103

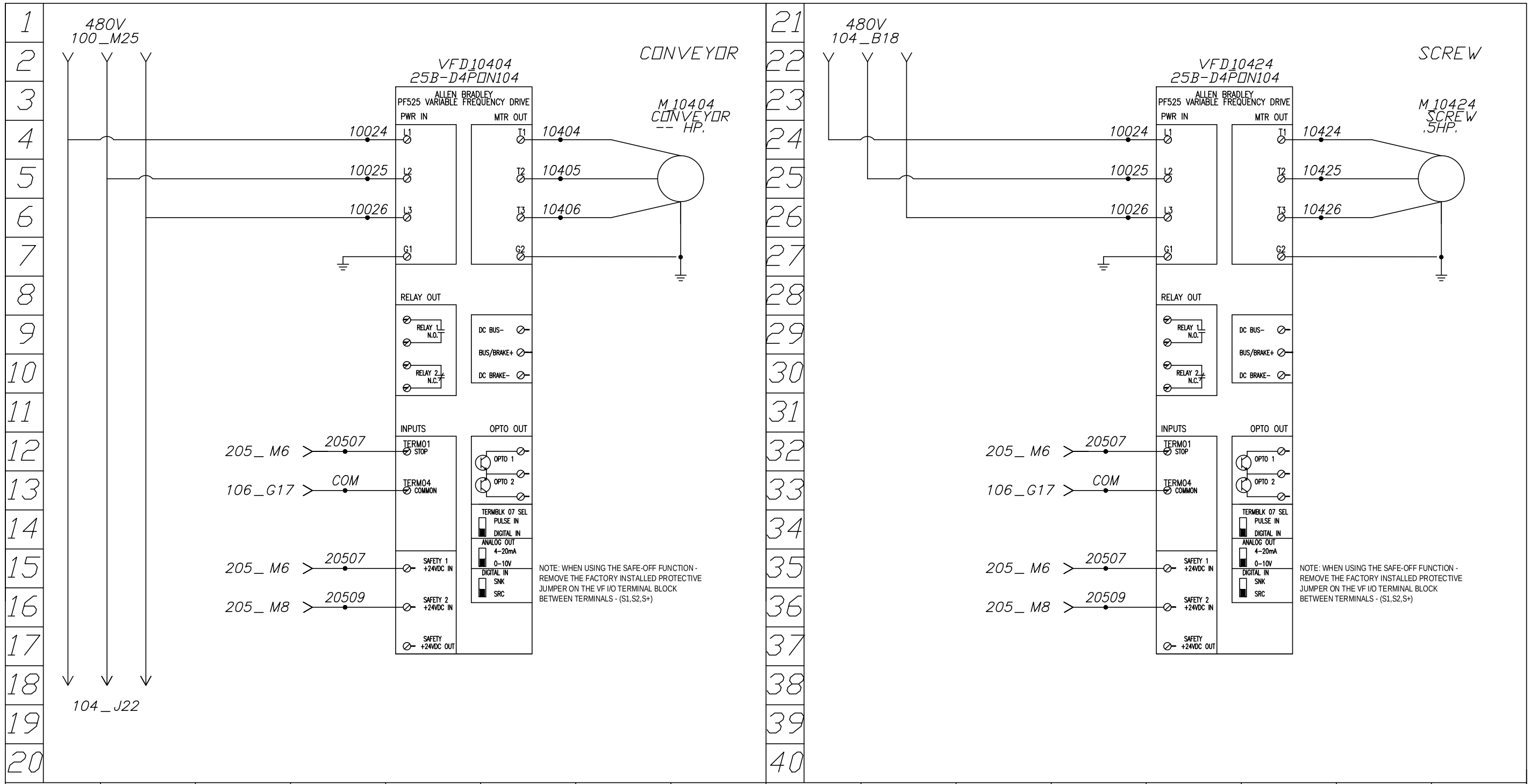

NOTES

1. 480V POWER WIRING IS BROWN,ORANGE,YELLOW
2. 220V POWER WIRING IS BLACK
3.
4.
5.

This Product is Listed by UNDERWRITERS LABORATORIES, INC. and Bears the Mark:

c(UL)us

LEGEND

- POWER TERMINAL, 600V
- CONTROL TERMINAL, 600V
- FUSE
- NUMBERED WIRE
- WIRE IN ENCLOSURES
- OTHER WIRING

sleeve seal

SCALE: NONE | DRAWN BY: GG

DATE: 7/15/20 | APP.

This drawing is the property of Sleeve Seal, LLC Inc. It is loaned upon the express condition that it shall not be copied or reproduced in any manner, that it shall not be submitted to others for examination without the consent of this company, that it shall not be used in any other way detrimental to the interest of Sleeve Seal LLC Inc., and that it shall be returned upon demand.

TITLE: 480V WIRING SSL-600i Blue Marble Indianapolis, IN

JOB# 05062010 | PAGE# 104

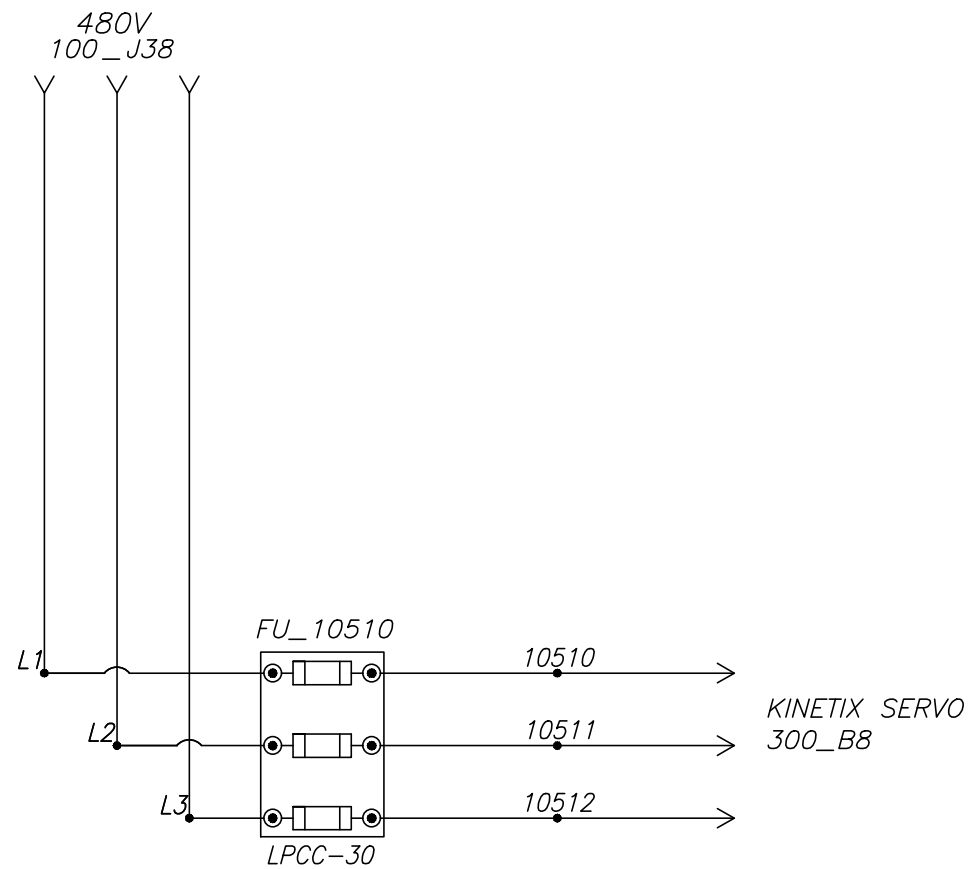

NOTES

1. 480V POWER WIRING IS BROWN,ORANGE,YELLOW
2. 220V POWER WIRING IS BLACK
3.
4.
5.

This Product is Listed by
UNDERWRITERS LABORATORIES, INC.
and Bears the Mark:

c UL us

LEGEND

- POWER TERMINAL, 600V
- CONTROL TERMINAL, 600V
- FUSE
- NUMBERED WIRE
- WIRE IN ENCLOSURES
- OTHER WIRING

sleeve seal

SCALE: NONE | DRAWN BY: GG
DATE: 7/15/20 | APP.

This drawing is the property of Sleeve Seal, LLC Inc. It is loaned upon the express condition that it shall not be copied or reproduced in any manner, that it shall not be submitted to others for examination without the consent of this company, that it shall not be used in any other way detrimental to the interest of Sleeve Seal LLC Inc., and that it shall be returned upon demand.

TITLE: 480V WIRING
SSL-600i
Blue Marble
Indianapolis, IN

JOB# 05062010 | PAGE# 105

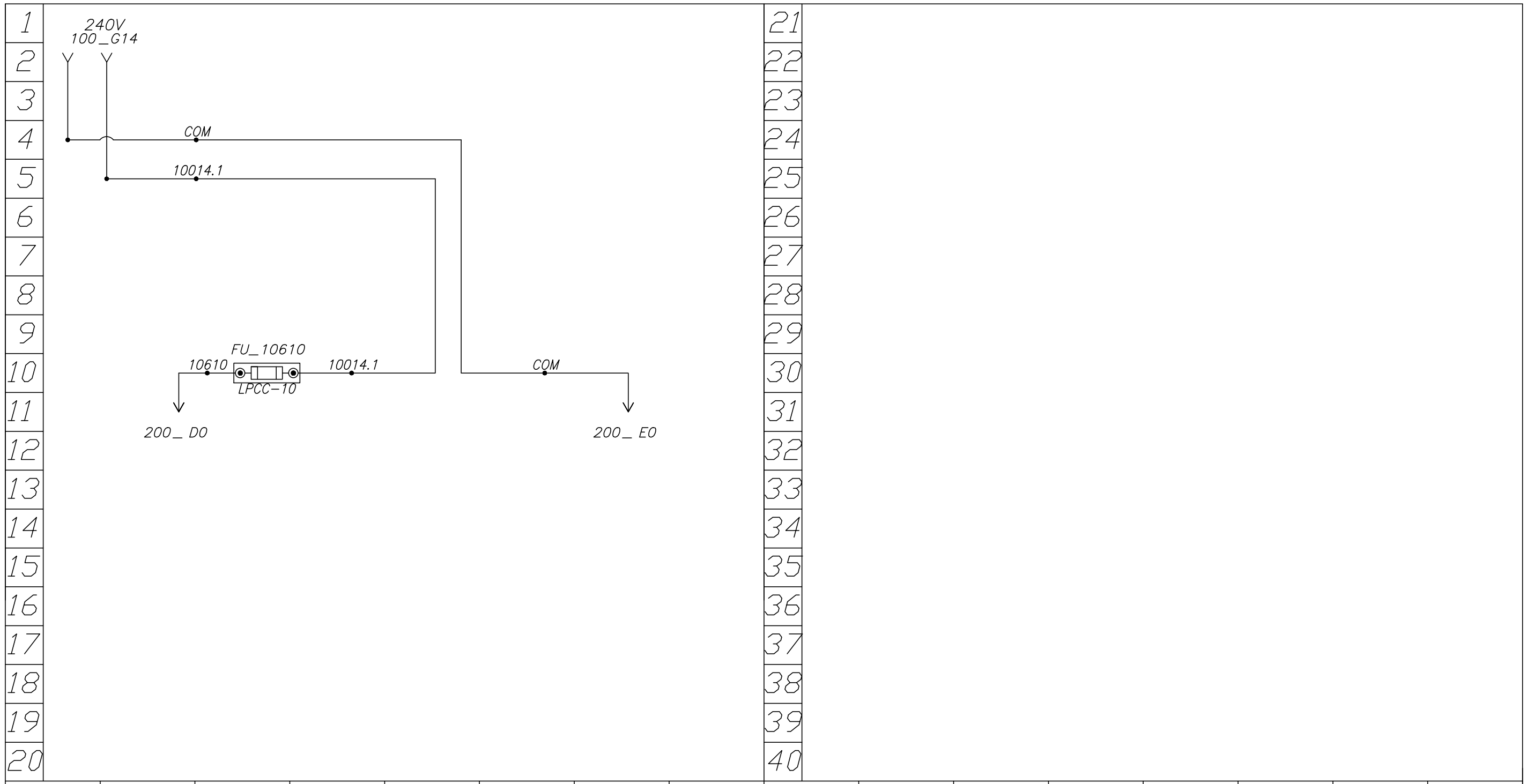

NOTES

1. 480V POWER WIRING IS BROWN,ORANGE,YELLOW
2. 220V POWER WIRING IS BLACK
3.
4.
5.

This Product is Listed by
UNDERWRITERS LABORATORIES, INC.
and Bears the Mark:

c UL us

LEGEND

- POWER TERMINAL, 600V
- CONTROL TERMINAL, 600V
- FUSE
- NUMBERED WIRE
- WIRE IN ENCLOSURES
- OTHER WIRING

sleeve seal

SCALE: NONE | DRAWN BY: GG
DATE: 7/15/20 | APP.

This drawing is the property of Sleeve Seal, LLC Inc. It is loaned upon the express condition that it shall not be copied or reproduced in any manner, that it shall not be submitted to others for examination without the consent of this company, that it shall not be used in any other way detrimental to the interest of Sleeve Seal LLC Inc., and that it shall be returned upon demand.

TITLE: 480V WIRING
SSL-600i
Blue Marble
Indianapolis, IN

JOB# 05062010 | PAGE# 106

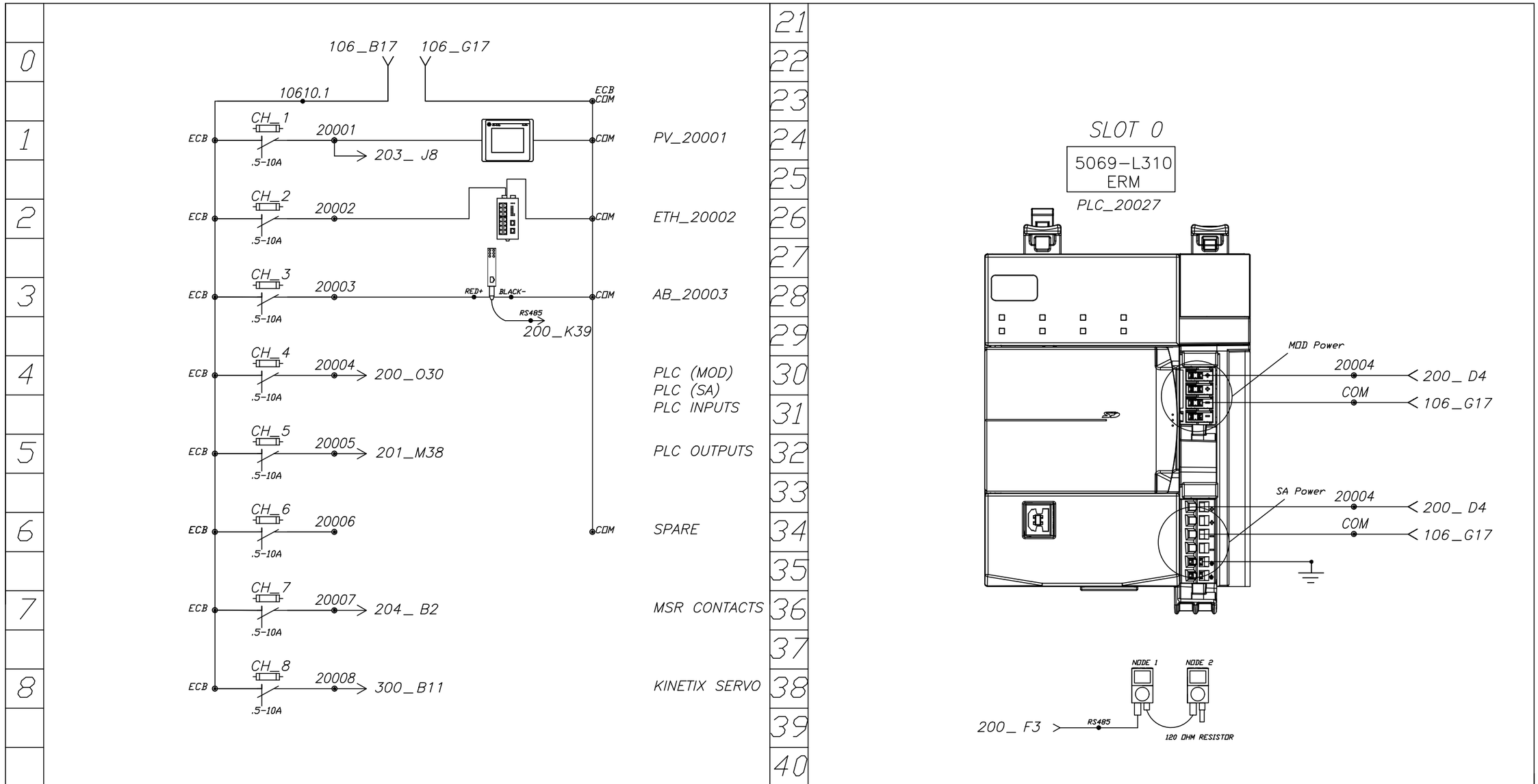

NOTES

This Product is Listed by UNDERWRITERS LABORATORIES, INC. and Bears the Mark:

c UL us

LEGEND

- POWER TERMINAL, 600V
- CONTROL TERMINAL, 600V
- FUSE
- NUMBERED WIRE
- WIRE IN ENCLOSURES
- OTHER WIRING

sleeve seal

SCALE: NONE | DRAWN BY: GG

DATE: 7/15/20 | APP.

This drawing is the property of Sleeve Seal, LLC Inc. It is loaned upon the express condition that it shall not be copied or reproduced in any manner, that it shall not be submitted to others for examination without the consent of this company, that it shall not be used in any other way detrimental to the interest of Sleeve Seal LLC Inc., and that it shall be returned upon demand.

TITLE: 24VDC SSL-600i Blue Marble Indianapolis, IN

JOB# 05062010 | PAGE# 200

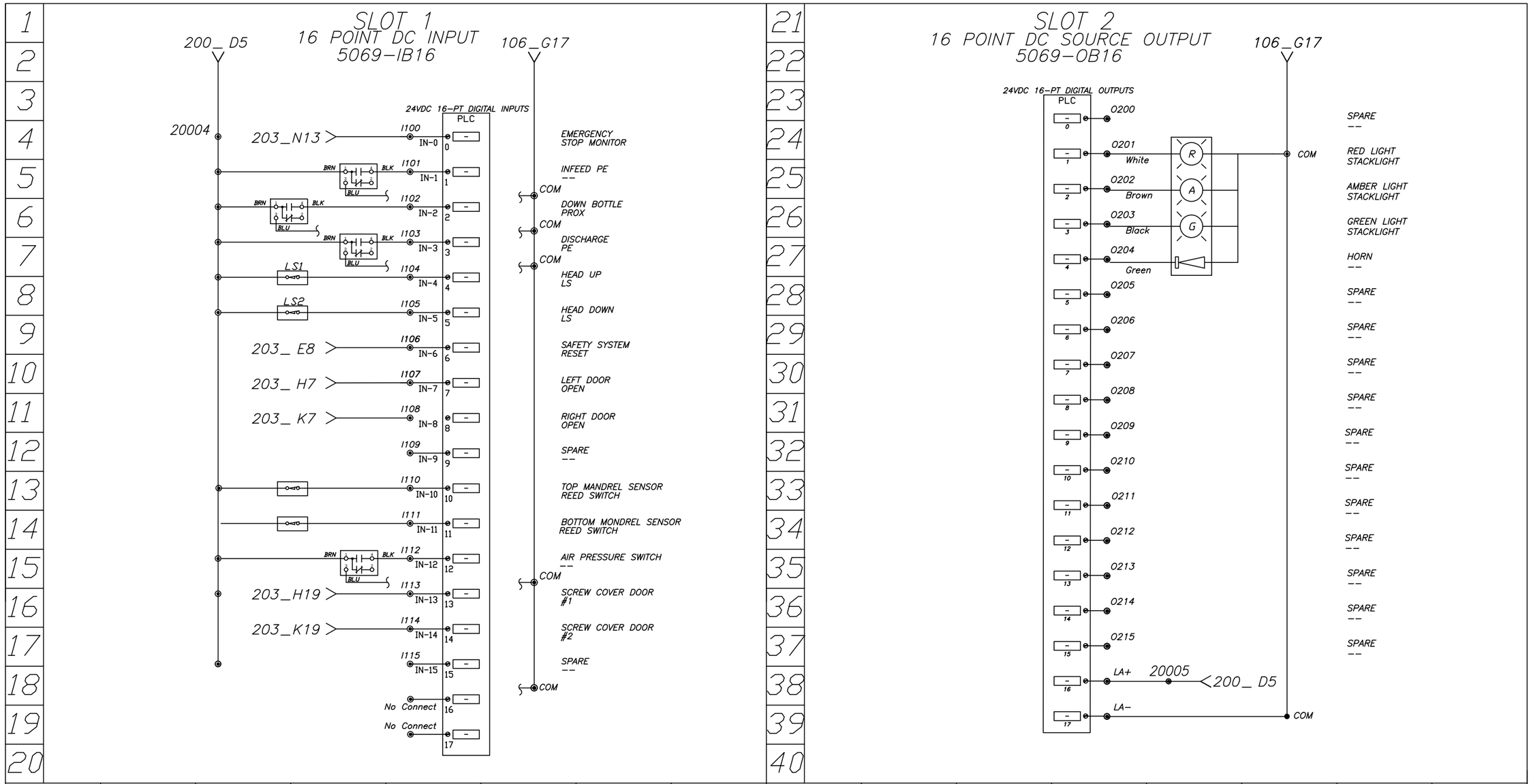

NOTES

This Product is Listed by UNDERWRITERS LABORATORIES, INC. and Bears the Mark:

c(UL)us

LEGEND

- POWER TERMINAL, 600V
- CONTROL TERMINAL, 600V
- FUSE
- NUMBERED WIRE
- WIRE IN ENCLOSURES
- OTHER WIRING

sleeve seal

SCALE: NONE	DRAWN BY: GG
DATE: 7/15/20	APP.

This drawing is the property of Sleeve Seal, LLC Inc. It is loaned upon the express condition that it shall not be copied or reproduced in any manner, that it shall not be submitted to others for examination without the consent of this company, that it shall not be used in any other way detrimental to the interest of Sleeve Seal LLC Inc., and that it shall be returned upon demand.

TITLE: 24VDC SSL-600i Blue Marble Indianapolis, IN

JOB# 05062010 PAGE# 201

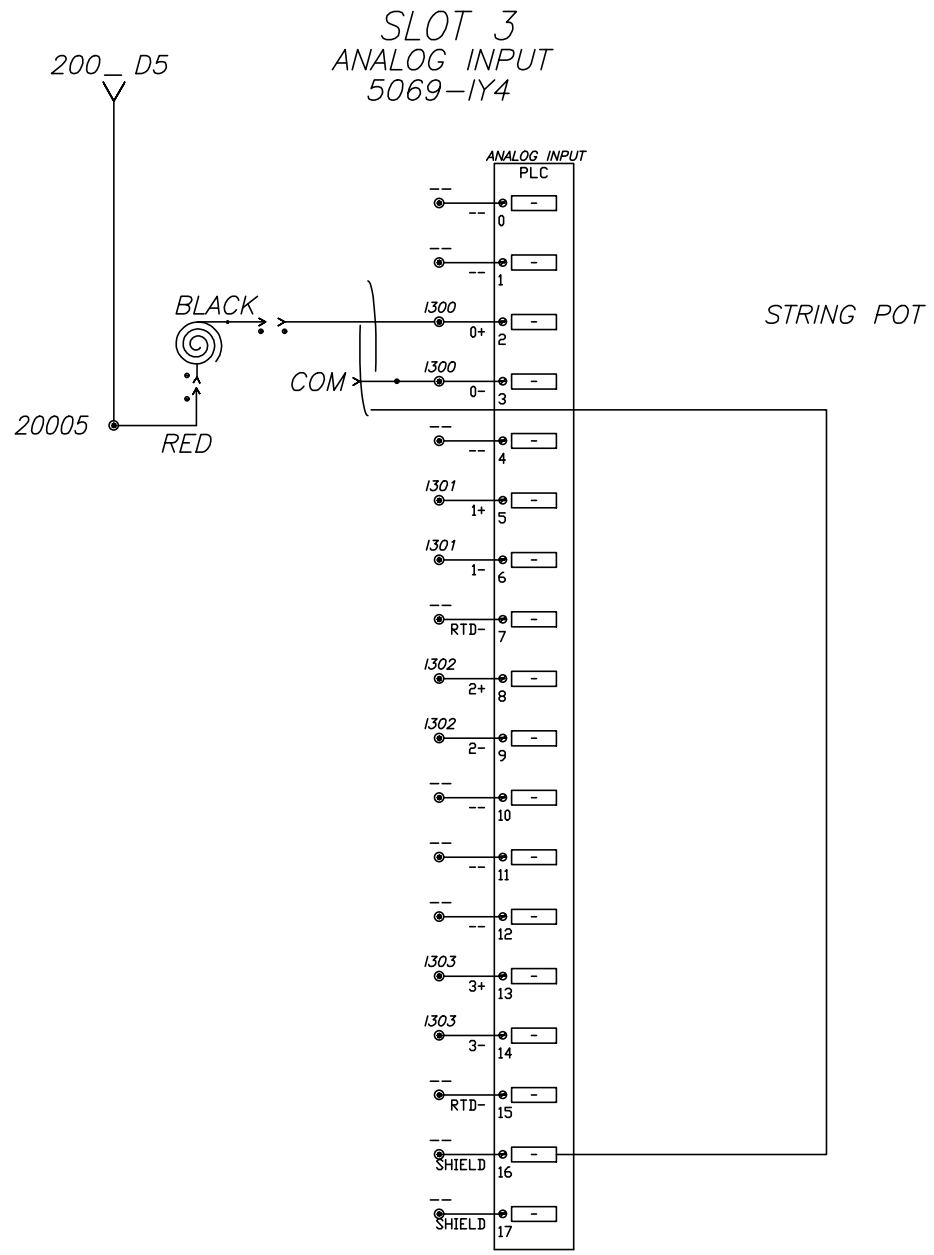

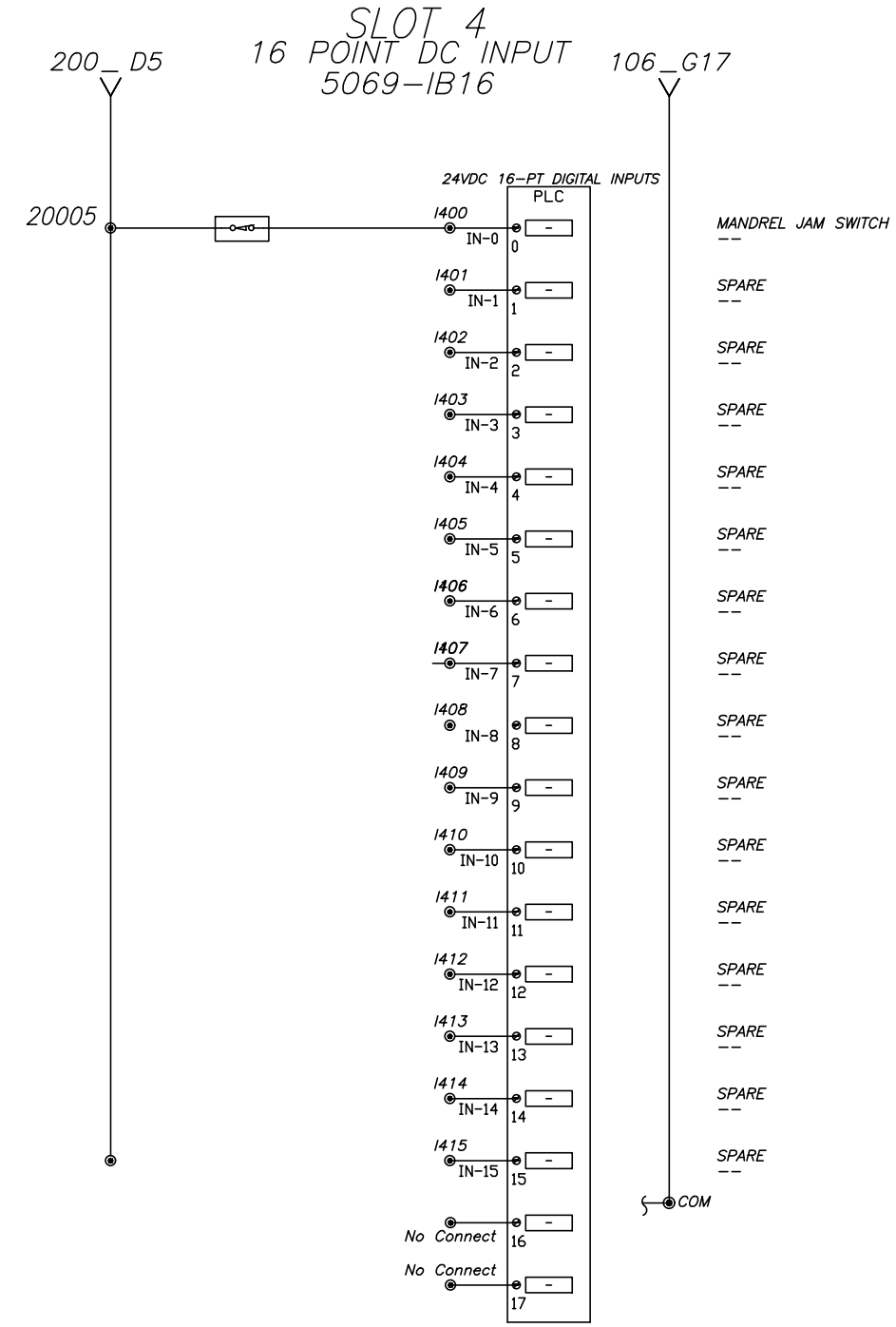

NOTES

This Product is Listed by UNDERWRITERS LABORATORIES, INC. and Bears the Mark:

c(UL)us

LEGEND

- POWER TERMINAL, 600V
- CONTROL TERMINAL, 600V
- FUSE
- NUMBERED WIRE
- WIRE IN ENCLOSURES
- OTHER WIRING

sleeve seal

SCALE: NONE | DRAWN BY: GG

DATE: 7/15/20 | APP.

This drawing is the property of Sleeve Seal, LLC Inc. It is loaned upon the express condition that it shall not be copied or reproduced in any manner, that it shall not be submitted to others for examination without the consent of this company, that it shall not be used in any other way detrimental to the interest of Sleeve Seal LLC Inc., and that it shall be returned upon demand.

TITLE: 24VDC SSL-600i Blue Marble Indianapolis, IN

JOB# 05062010 | PAGE# 202

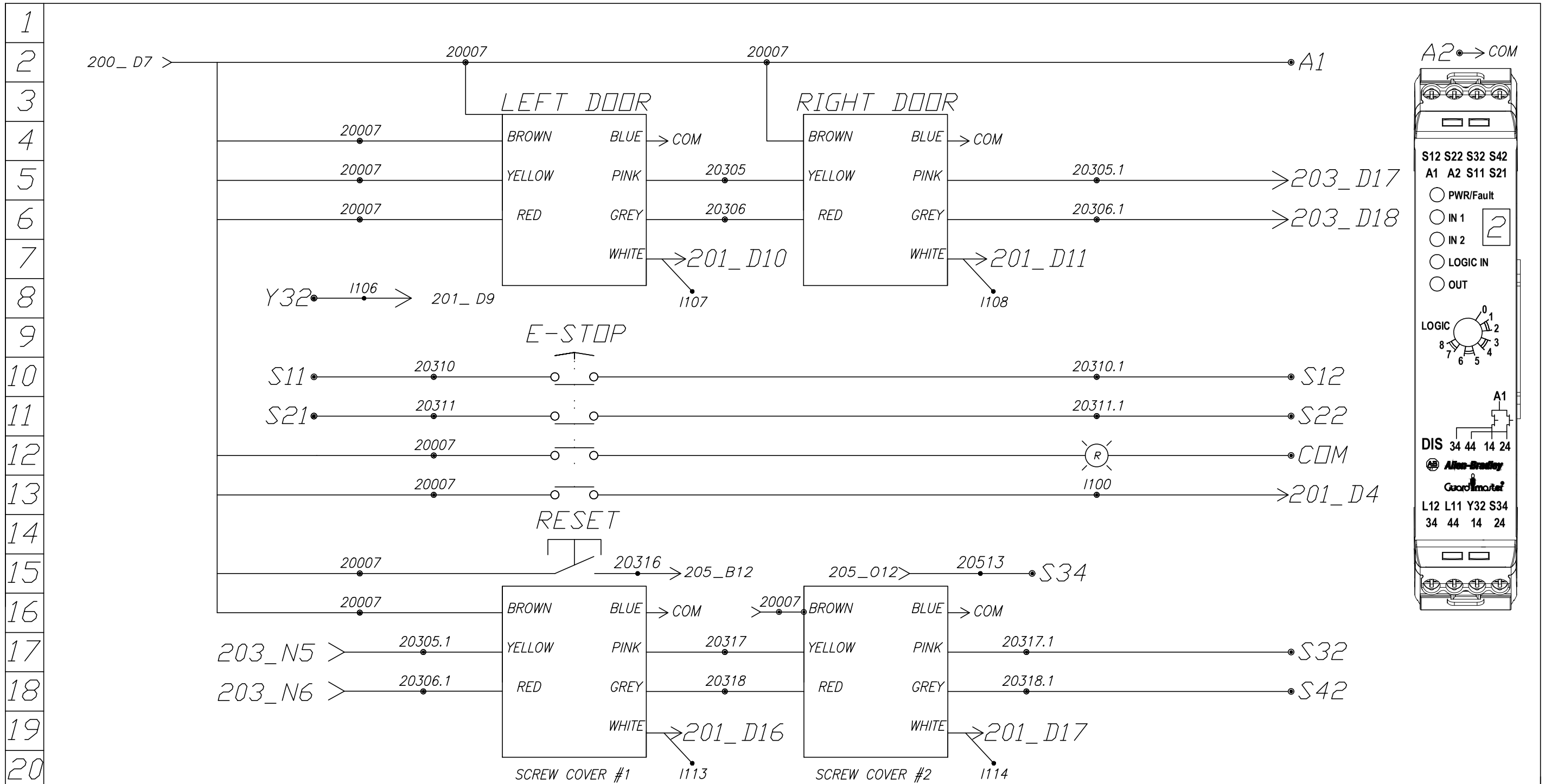

This Product is Listed by UNDERWRITERS LABORATORIES, INC. and Bears the Mark:

c UL us

LEGEND

- POWER TERMINAL, 600V
- CONTROL TERMINAL, 600V
- FUSE
- NUMBERED WIRE
- WIRE IN ENCLOSURES
- OTHER WIRING

sleeve seal

SCALE: NONE | DRAWN BY: GG

DATE: 7/15/20 | APP.

This drawing is the property of Sleeve Seal, LLC Inc. It is loaned upon the express condition that it shall not be copied or reproduced in any manner, that it shall not be submitted to others for examination without the consent of this company, that it shall not be used in any other way detrimental to the interest of Sleeve Seal LLC Inc., and that it shall be returned upon demand.

TITLE: 24VDC SSL-600i Blue Marble Indianapolis, IN

JOB# 05062010 | PAGE# 203

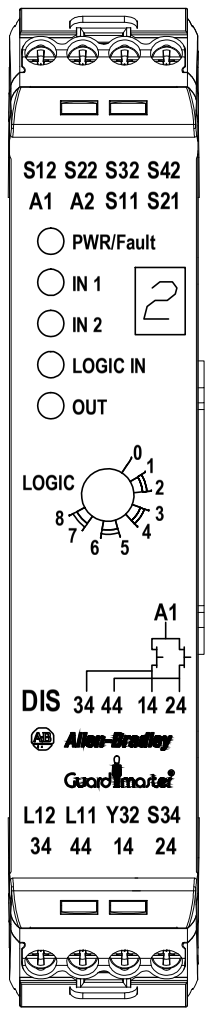

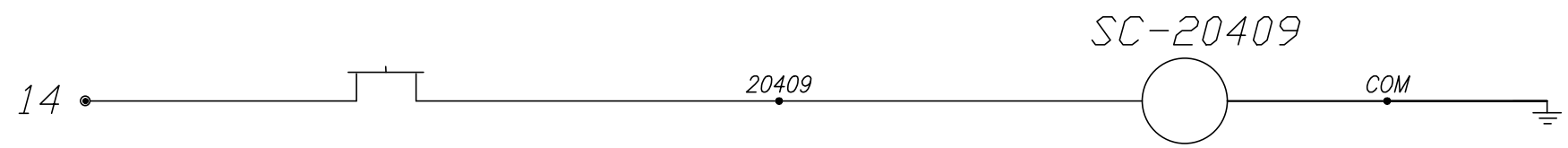

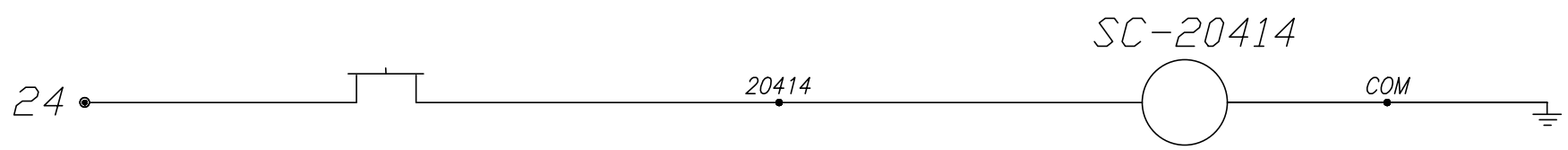

A	B	C	D	E	F	G	H	I	J	K	L	M	N	O	P

NOTES

This Product is Listed by UNDERWRITERS LABORATORIES, INC. and Bears the Mark:

c UL us

LEGEND

- POWER TERMINAL, 600V
- CONTROL TERMINAL, 600V
- FUSE
- NUMBERED WIRE
- WIRE IN ENCLOSURES
- OTHER WIRING

sleeve seal

SCALE: NONE | DRAWN BY: GG

DATE: 7/15/20 | APP.

This drawing is the property of Sleeve Seal, LLC Inc. It is loaned upon the express condition that it shall not be copied or reproduced in any manner, that it shall not be submitted to others for examination without the consent of this company, that it shall not be used in any other way detrimental to the interest of Sleeve Seal LLC Inc., and that it shall be returned upon demand.

TITLE: 24VDC SSL-600i Blue Marble Indianapolis, IN

JOB# 05062010 | PAGE# 204

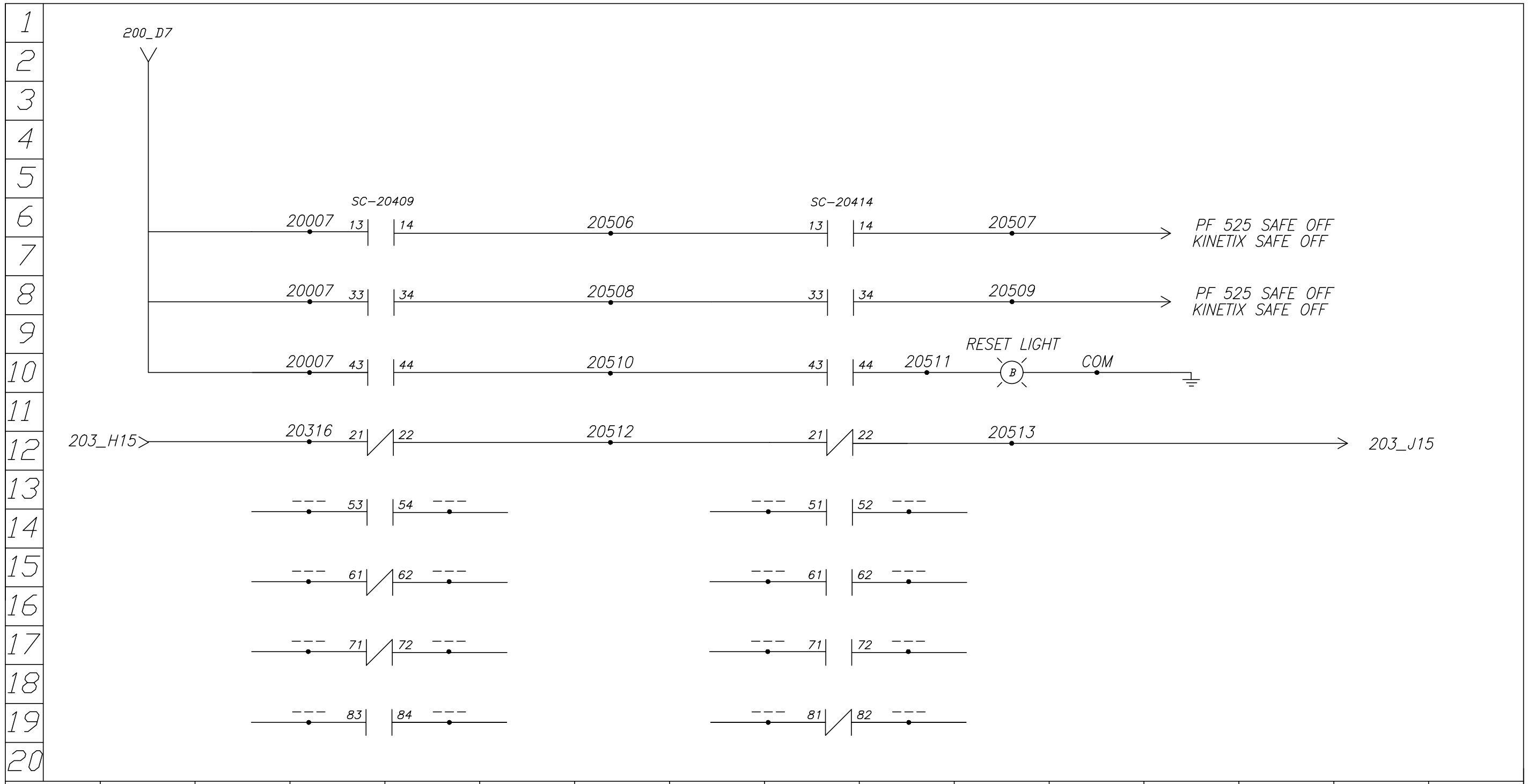

NOTES

This Product is Listed by UNDERWRITERS LABORATORIES, INC. and Bears the Mark:

c UL us

LEGEND

- POWER TERMINAL, 600V
- CONTROL TERMINAL, 600V
- FUSE
- NUMBERED WIRE
- WIRE IN ENCLOSURES
- OTHER WIRING

sleeve seal

SCALE: NONE | DRAWN BY: GG

DATE: 7/15/20 | APP.

This drawing is the property of Sleeve Seal, LLC Inc. It is loaned upon the express condition that it shall not be copied or reproduced in any manner, that it shall not be submitted to others for examination without the consent of this company, that it shall not be used in any other way detrimental to the interest of Sleeve Seal LLC Inc., and that it shall be returned upon demand.

TITLE: 24VDC SSL-600i Blue Marble Indianapolis, IN

JOB# 05062010 | PAGE# 205

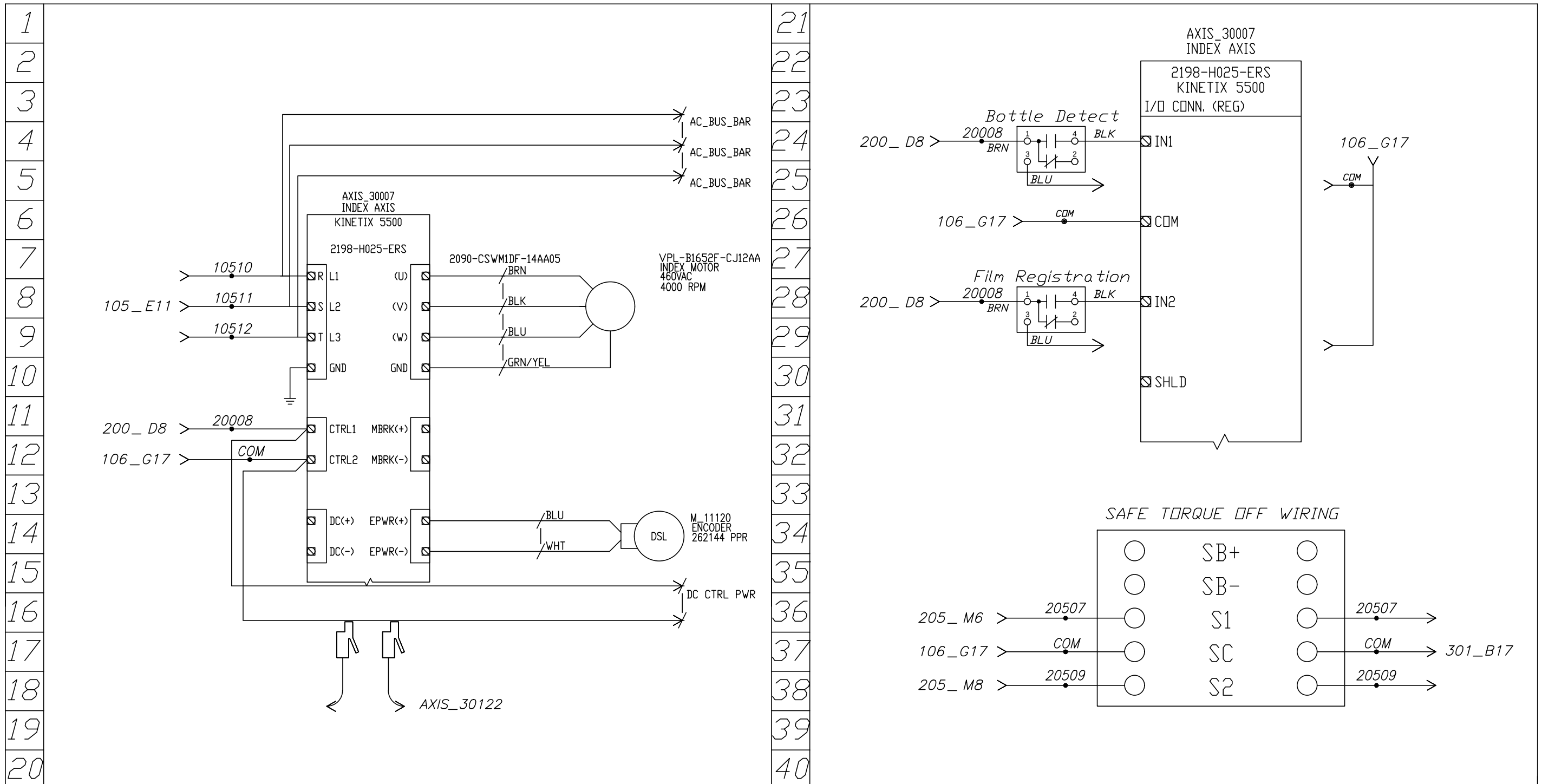

NOTES

This Product is Listed by UNDERWRITERS LABORATORIES, INC. and Bears the Mark:

c UL us

LEGEND

- POWER TERMINAL, 600V
- CONTROL TERMINAL, 600V
- FUSE
- NUMBERED WIRE
- WIRE IN ENCLOSURES
- OTHER WIRING

sleeve seal

SCALE: NONE | DRAWN BY: GG

DATE: 7/15/20 | APP.

This drawing is the property of Sleeve Seal, LLC Inc. It is loaned upon the express condition that it shall not be copied or reproduced in any manner, that it shall not be submitted to others for examination without the consent of this company, that it shall not be used in any other way detrimental to the interest of Sleeve Seal LLC Inc., and that it shall be returned upon demand.

TITLE: KINETIX SSL-600i Blue Marble Indianapolis, IN

JOB# 05062010 | PAGE# 300

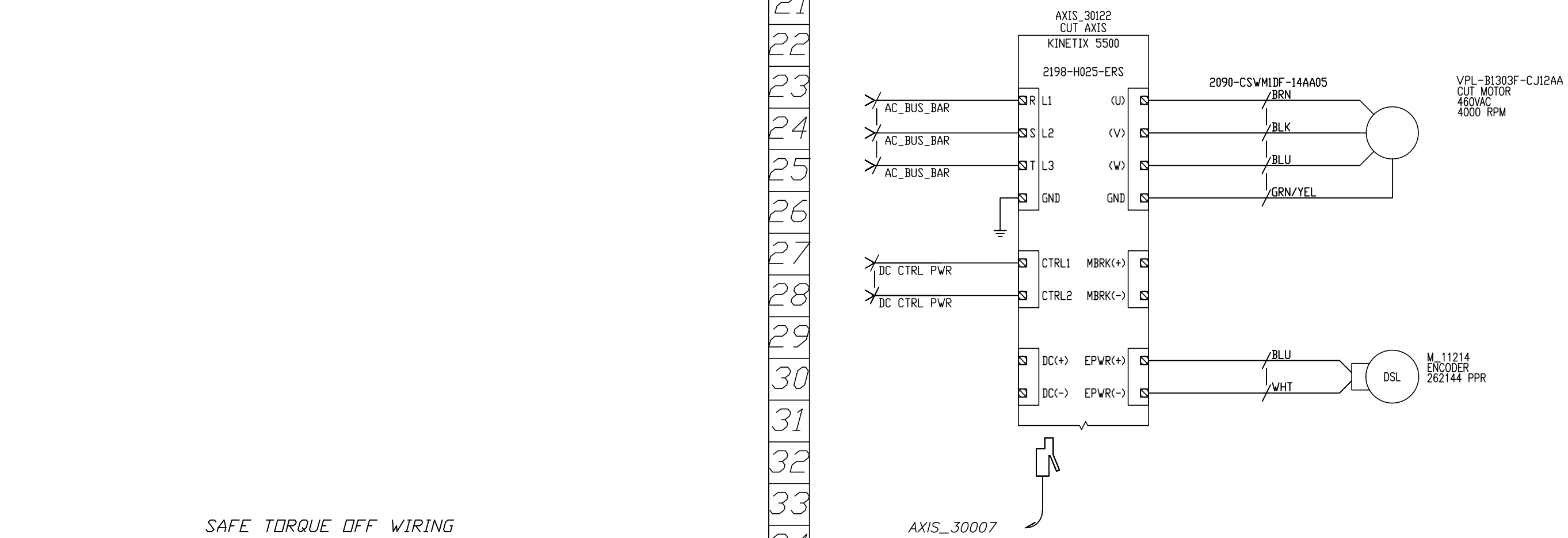

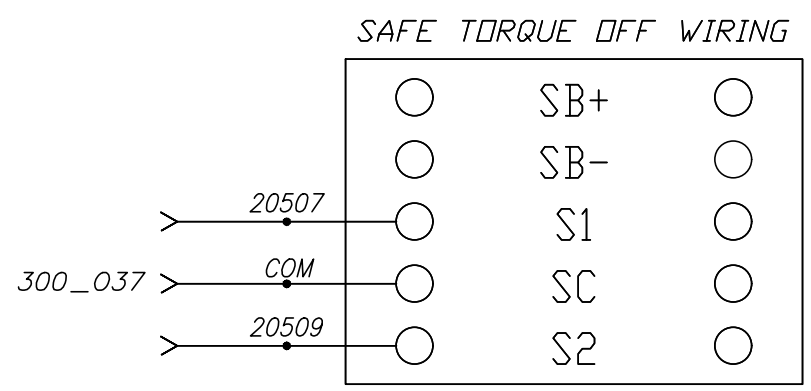

A	B	C	D	E	F	G	H	I	J	K	L	M	N	O	P

NOTES

This Product is Listed by UNDERWRITERS LABORATORIES, INC. and Bears the Mark:

c UL us

LEGEND

- POWER TERMINAL, 600V
- CONTROL TERMINAL, 600V
- FUSE
- NUMBERED WIRE
- WIRE IN ENCLOSURES
- OTHER WIRING

sleeve seal

SCALE: NONE | DRAWN BY: GG

DATE: 7/15/20 | APP.

This drawing is the property of Sleeve Seal, LLC Inc. It is loaned upon the express condition that it shall not be copied or reproduced in any manner, that it shall not be submitted to others for examination without the consent of this company, that it shall not be used in any other way detrimental to the interest of Sleeve Seal LLC Inc., and that it shall be returned upon demand.

TITLE: KINETIX SSL-600i Blue Marble Indianapolis, IN

JOB# 05062010 | PAGE# 301

BOM

ITEM	QTY	DESCRIPTION	PART NO	MANF.
1	1	MAIN DISCONNECT	194R-C30-1753S-PYS2	AB
2	1	DISTRIBUTION BLOCK	1492-PDM3141	AB
3	5	3 POLE FUSE HOLDER	1492-FB3C30-L	AB
4	1	2 POLE FUSE HOLDER	1492-FB2C30-L	AB
5	1	1 POLE FUSE HOLDER	1492-FB1C30-L	AB
6	1	480-380 TRANSFORMER	16768010090	LI NENG
7	1	CONTROL TRANSFORMER	9070TF500D1	AB
8	1	ECB	787-1668/0106-0000	WAGO
9	1	PLC	5069-L310ERM	AB
10	1	INPUT MODULE	5069-IB16	AB
11	1	OUTPUT MODULE	5069-OB16	AB
12	1	ANALOG INPUT MODULE	5069-IY4	AB
13	1	PANELVIEW	2711P-T10C21D8S	AB
14	2	PF525 VFD	25B-D4PON104	AB
15	5	PF525 VFD	25B-D1P4N104	AB
16	1	GRACEPORT UTILITY RECEPTACLE	P-R2-K3RF3-T109U730	GP
17	1	ETHERNET SWITCH	116TX	NTRON
18	2	KINETIX SERVO DRIVES	2198-H025-ERS	AB
19	2	KINETIX CABLES	2090-CSWM1DF-14AA05	AB
20	1	VPL INDEX MOTOR	VPL-B1652F-CJ12AA	AB
21	1	VPL CUT MOTOR	VPL-B1303F-CJ12AA	AB
22	2	DOOR SAFETY SWITCHES	440N-Z21SS3PH	AB
23	2	DOOR SAFETY CABLES	889D-F8AB-10	AB
24	1	SAFETY RELAY	440R-D22S2	AB
25	2	SAFETY CONTACTORS	700S-CF530EJC	AB
26	1	DC POWER SUPPLY	2903154	PC
27	1	FRAME 1 & 2 INPUT CONNECTOR	2198-H040-ADP-IN	AB
28	1	FRAME 1 & 2 AC & CONTROL PWR.	2198-H040-AP-T	AB

NOTES

This Product is Listed by UNDERWRITERS LABORATORIES, INC. and Bears the Mark:

c UL us

LEGEND

- POWER TERMINAL, 600V
- GROUNG TERMINAL, 600V
- CONTROL TERMINAL, 600V
- FUSED TERMINAL, 300V
- NUMBERED CONTROL WIRE
- WIRE IN ENCLOSURES
- OTHER WIRING

sleeve seal

SCALE: NONE | DRAWN BY: GG

DATE: | APP.

This drawing is the property of Sleeve Seal, LLC Inc. It is loaned upon the express condition that it shall not be copied or reproduced in any manner, that it shall not be submitted to others for examination without the consent of this company, that it shall not be used in any other way detrimental to the interest of Sleeve Seal LLC Inc., and that it shall be returned upon demand.

TITLE:

BOM

ITEM	QTY	DESCRIPTION	PART NO	MANF.
29	1	STACK LIGHT BASE	856T-B24SNC	AB
30	1	STACK LIGHT MOD	856T-BR5	AB
31	1	STACK LIGHT MOD	856T-BR4	AB
32	1	STACK LIGHT MOD	856T-BR3	AB
33	1	STACK LIGHT SOUND MOD	856T-BP1	AB
34	--	--	--	--
35	--	--	--	--
36	--	--	--	--
37	--	--	--	--
38	--	--	--	--
39	--	--	--	--
40	--	--	--	--
41	--	--	--	--
42	--	--	--	--
43	--	--	--	--
44	--	--	--	--
45	--	--	--	--
46	--	--	--	--
47	--	--	--	--
48	--	--	--	--
49	--	--	--	--
50	--	--	--	--
51	--	--	--	--
52	--	--	--	--
53	--	--	--	--
54	--	--	--	--
55	--	--	--	--
56	--	--	--	--

NOTES

This Product is Listed by
UNDERWRITERS LABORATORIES, INC.
and Bears the Mark:

c UL us

LEGEND

- POWER TERMINAL, 600V
- GROUNG TERMINAL, 600V
- CONTROL TERMINAL, 600V
- FUSED TERMINAL, 300V
- NUMBERED CONTROL WIRE
- WIRE IN ENCLOSURES
- OTHER WIRING

sleeve seal

SCALE: NONE | DRAWN BY: GG

DATE: | APP.

This drawing is the property of Sleeve Seal, LLC Inc. It is loaned upon the express condition that it shall not be copied or reproduced in any manner, that it shall not be submitted to others for examination without the consent of this company, that it shall not be used in any other way detrimental to the interest of Sleeve Seal LLC Inc., and that it shall be returned upon demand.

TITLE:

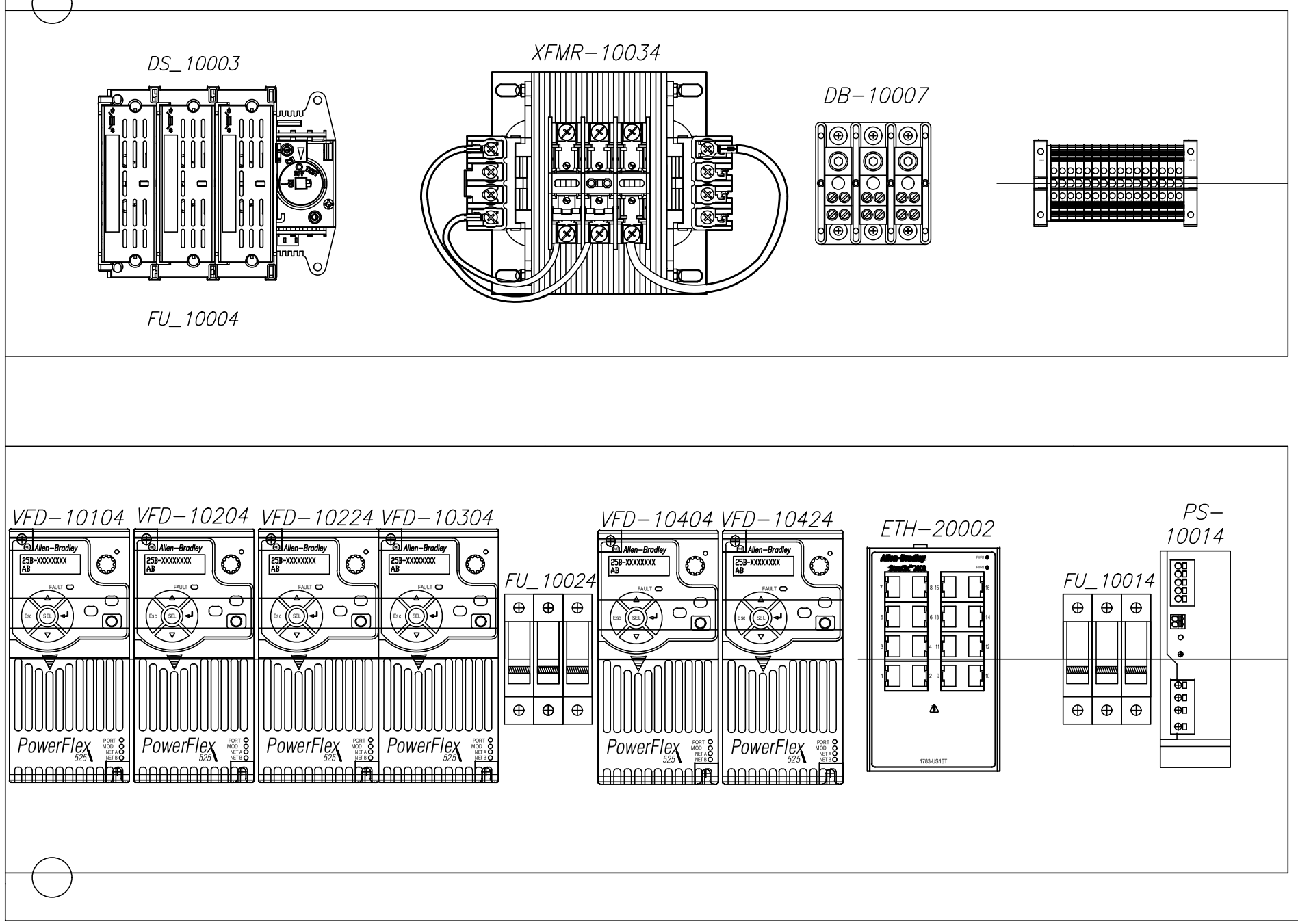

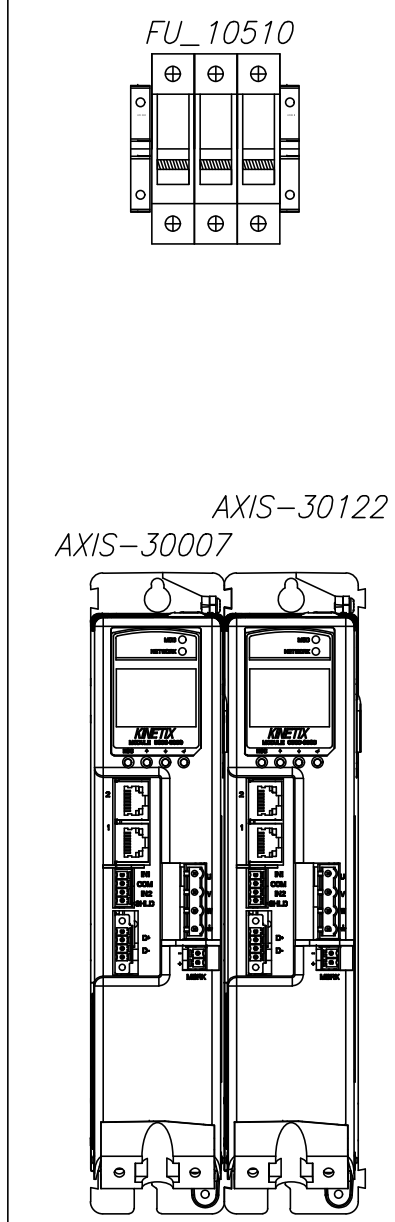

A	B	C	D	E	F	G	H	I	J	K	L	M	N	O	P

NOTES

This Product is Listed by UNDERWRITERS LABORATORIES, INC. and Bears the Mark:

c UL us

LEGEND

- POWER TERMINAL, 600V
- CONTROL TERMINAL, 600V
- FUSE
- NUMBERED WIRE
- WIRE IN ENCLOSURES
- OTHER WIRING

sleeve seal

SCALE: NONE | DRAWN BY: GG

DATE: 7/15/20 | APP.

This drawing is the property of Sleeve Seal, LLC Inc. It is loaned upon the express condition that it shall not be copied or reproduced in any manner, that it shall not be submitted to others for examination without the consent of this company, that it shall not be used in any other way detrimental to the interest of Sleeve Seal LLC Inc., and that it shall be returned upon demand.

TITLE: HV PANEL SSL-600i Blue Marble Indianapolis, IN

JOB# 05062010 | PAGE# PNL-1

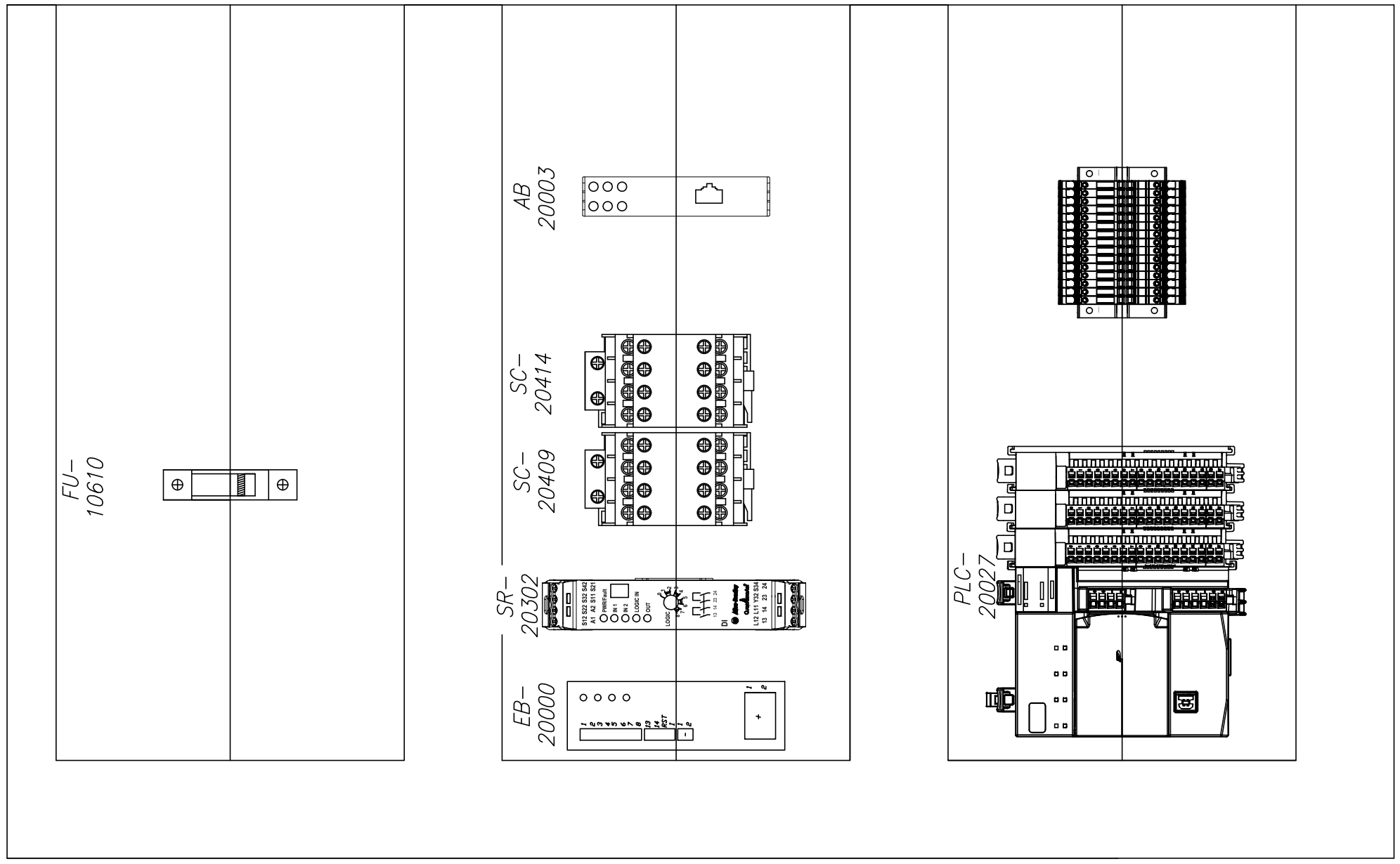

A	B	C	D	E	F	G	H	I	J	K	L	M	N	O	P

NOTES

This Product is Listed by UNDERWRITERS LABORATORIES, INC. and Bears the Mark:

c UL us

LEGEND

- POWER TERMINAL, 600V
- CONTROL TERMINAL, 600V
- FUSE
- NUMBERED WIRE
- WIRE IN ENCLOSURES
- OTHER WIRING

sleeve seal

SCALE: NONE | DRAWN BY: GG

DATE: 7/15/20 | APP.

This drawing is the property of Sleeve Seal, LLC Inc. It is loaned upon the express condition that it shall not be copied or reproduced in any manner, that it shall not be submitted to others for examination without the consent of this company, that it shall not be used in any other way detrimental to the interest of Sleeve Seal LLC Inc., and that it shall be returned upon demand.

TITLE: LV PANEL SSL-600i Blue Marble Indianapolis, IN

JOB# 05062010 | PAGE# PNL-2

Brush Section

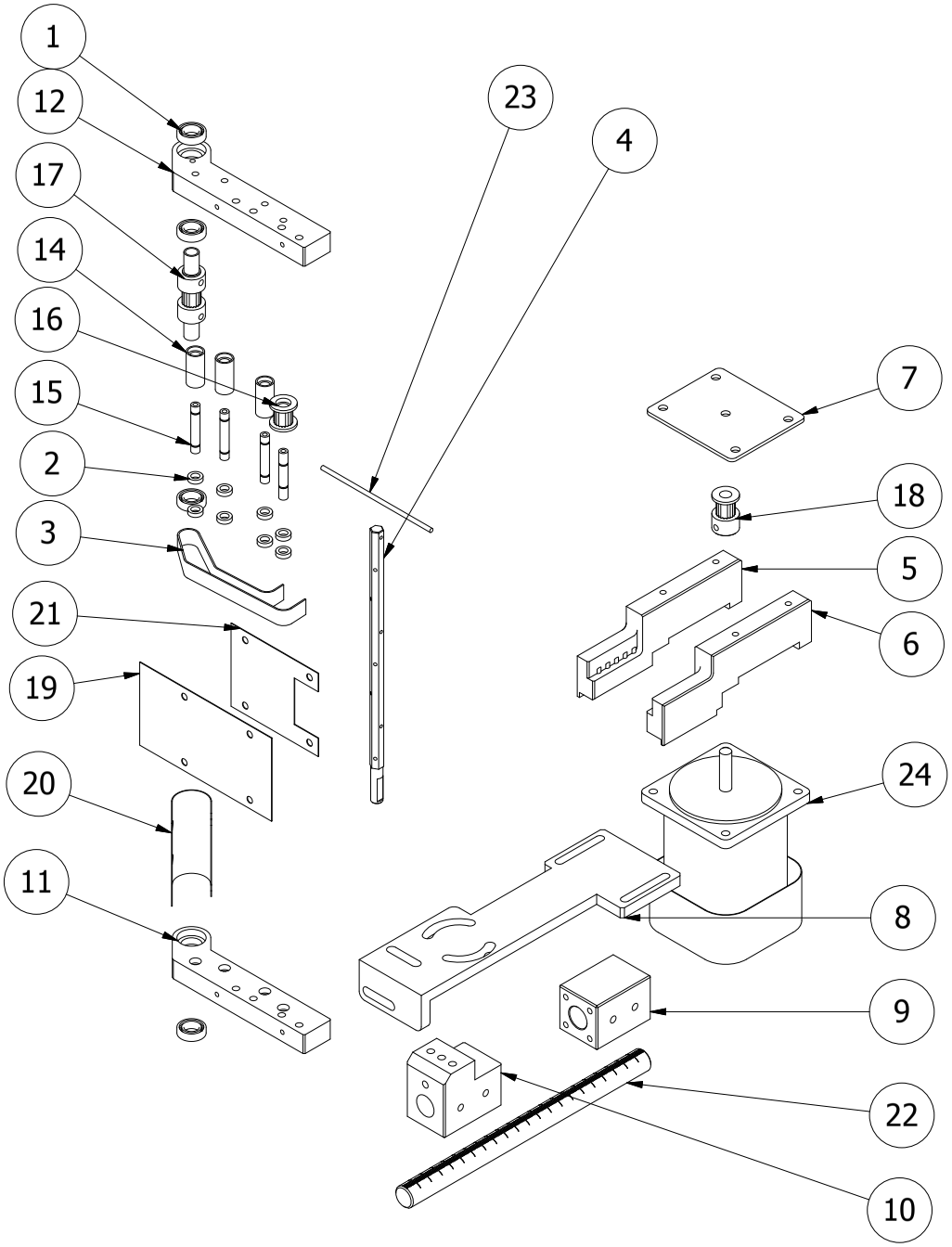

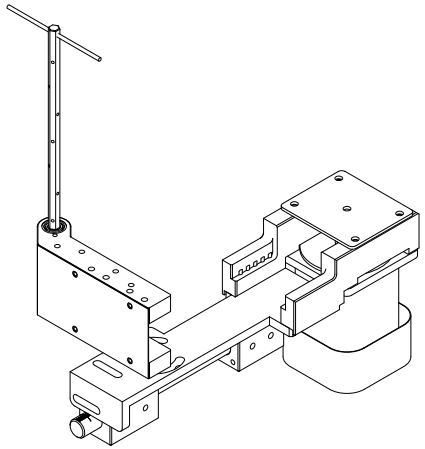

REF #	QTY	Specifics	Part Number
1	4	6800ZZ 10X19X5	16641000129
2	8	L1060ZZ 6X10X3	16641180009
3	1	MXL-310-12W	16640030001
4	1	XYL-BS-0021-02	132070021402
5	1	XYL-BS-5172-01	130075172401
6	1	XYL-BS-5173-01	130075173401
7	1	XYL-BS-5180-00	132075180400
8	1	XYL-BS-5192-00	132075192400
9	1	XYL-BS-5200-00	130075200400
10	1	XYL-BS-5211-01	130075211401
11	1	XYL-BS-5260-02	130075260402
12	1	XYL-BS-5270-02	130075270402
13	1	XYL-BS-5280-01	132075280401
14	3	XYL-BS-5290-03	133075290403
15	3	XYL-BS-5300-01	132075300401
16	1	XYL-BS-5310-01	132075310401
17	1	XYL-BS-5320-00	132075320400
18	1	XYL-BS-5330-00	130075330400
19	1	XYL-BS-5340-02	132075340402
20	1	XYL-BS-5350-02	132075350402
21	1	XYL-BS-5360-01	132075360401
22	1	XYL-BS-5391-00	132075391000
23	1	rubber bands	16651010001
24	1	4IK25A-UFTS	16760140008

-

Cutter Box Internals 1

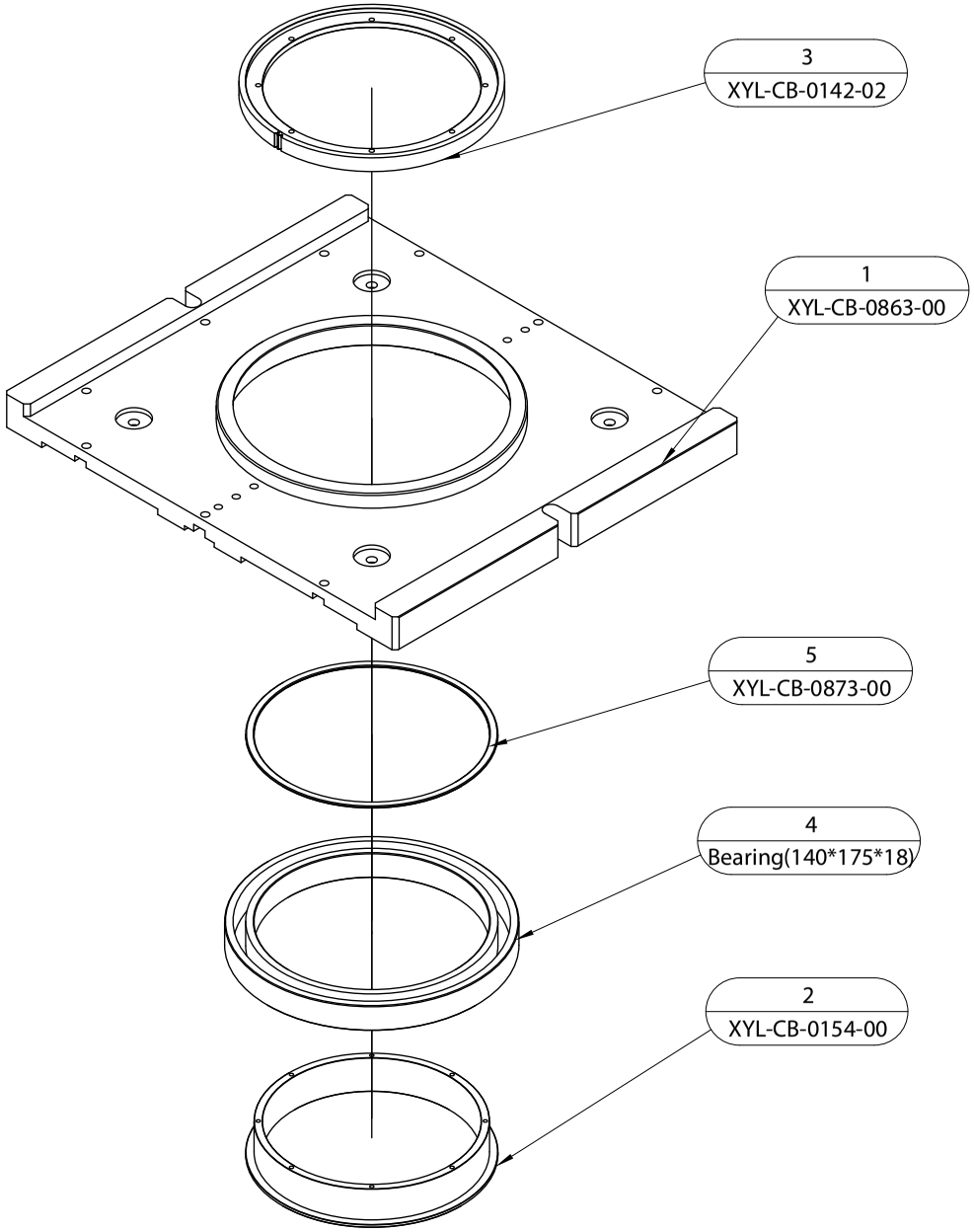

5	XYL-CB-0873-00	130090873000	1
4	Bearing(140*175*18)	16641000034	1
3	XYL-CB-0142-02	132090142402	1
2	XYL-CB-0154-00	132090154000	1
1	XYL-CB-0863-00	130090863000	1
REF #	**Specifics**	**Part Number**	**QTY**

Cutter Box Internals 2

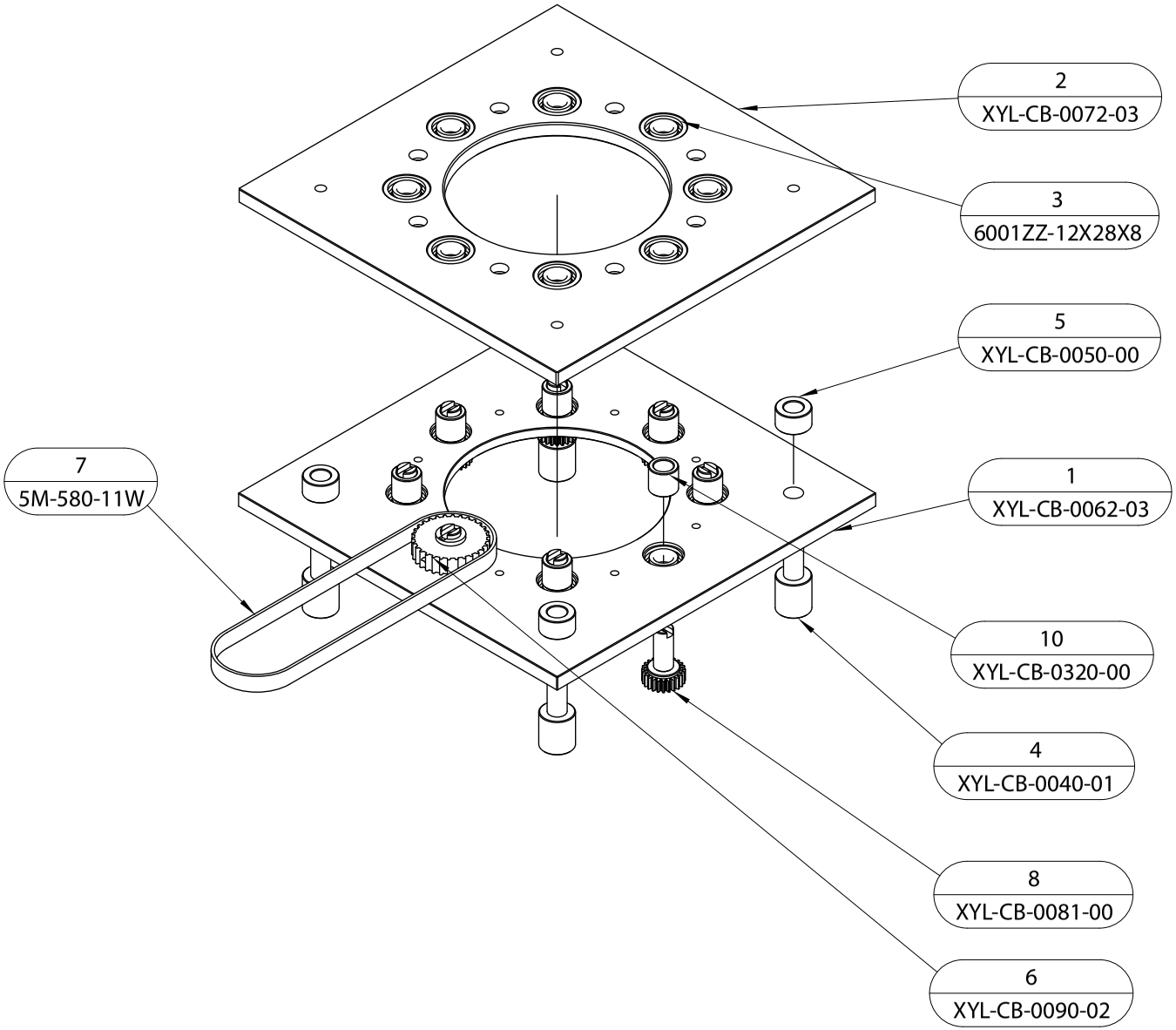

REF #	Specifics	Part Number	QTY
10	XYL-CB-0320-00	130090320400	7
9	Key 4-4-15L	B0300042	1
8	XYL-CB-0081-00	XYL-CB-0081-00	8
7	5M-580-11W	16640040013	1
6	XYL-CB-0090-02	130090090402	1
5	XYL-CB-0050-00	130090050400	4
4	XYL-CB-0040-01	132090040401	4
3	6001ZZ-12X28X8	16641000004	16
2	XYL-CB-0072-03	130090072403	1
1	XYL-CB-0062-03	130090062403	1

Cutter Box

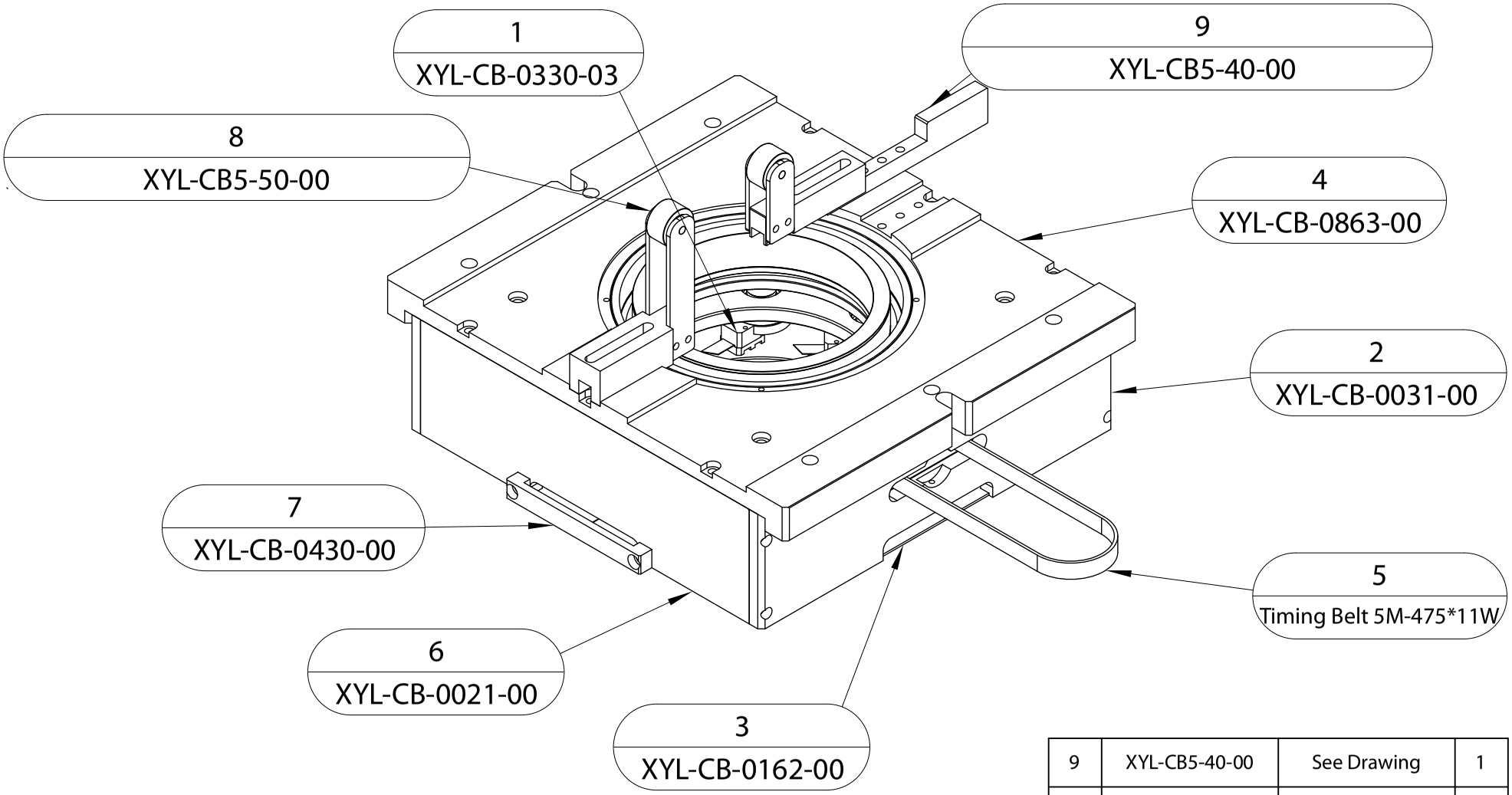

REF #	Specifics	Part Number	QTY
9	XYL-CB5-40-00	See Drawing	1
8	XYL-CB5-50-00	See Drawing	1
7	XYL-CB-0430-00	130090430400	1
6	XYL-CB-0021-00	130090021400	2
5	Timing Belt 5M-475*11W	16640040004	1
4	XYL-CB-0863-00	130090863000	1
3	XYL-CB-0162-00	131090162400	2
2	XYL-CB-0031-00	130090031400	2
1	XYL-CB-0330-03	132090330403	8

CB5-03-06

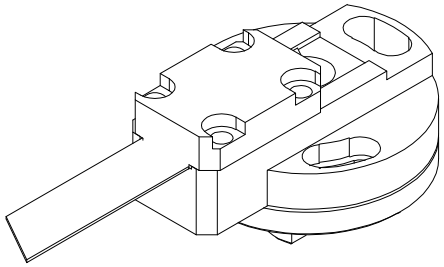

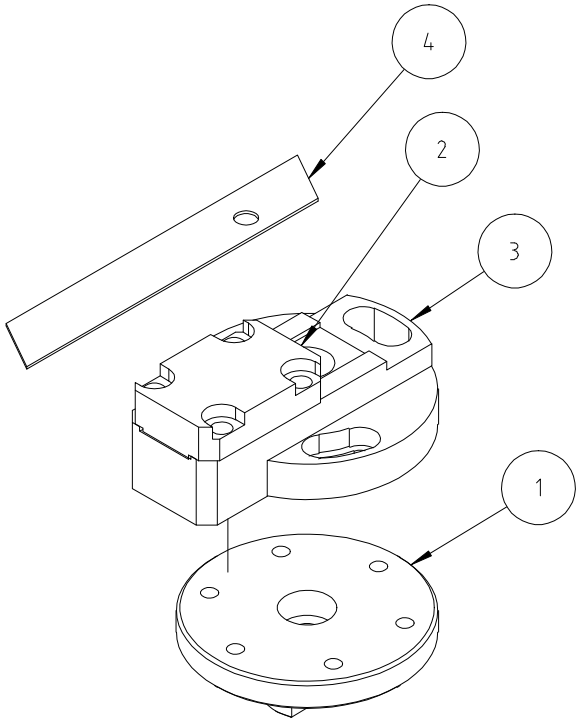

4	BLADE (6 SEGMENTS)	16651180007	1
3	XYL-CB-0332-05	132090332405	1
2	XYL-CB-0341-02	132090341402	1
1	XYL-CB-0350-00	132090350400	1
REF #	**Specifics**	**Part Number**	**QTY**

Drive Section - Sub Module 1

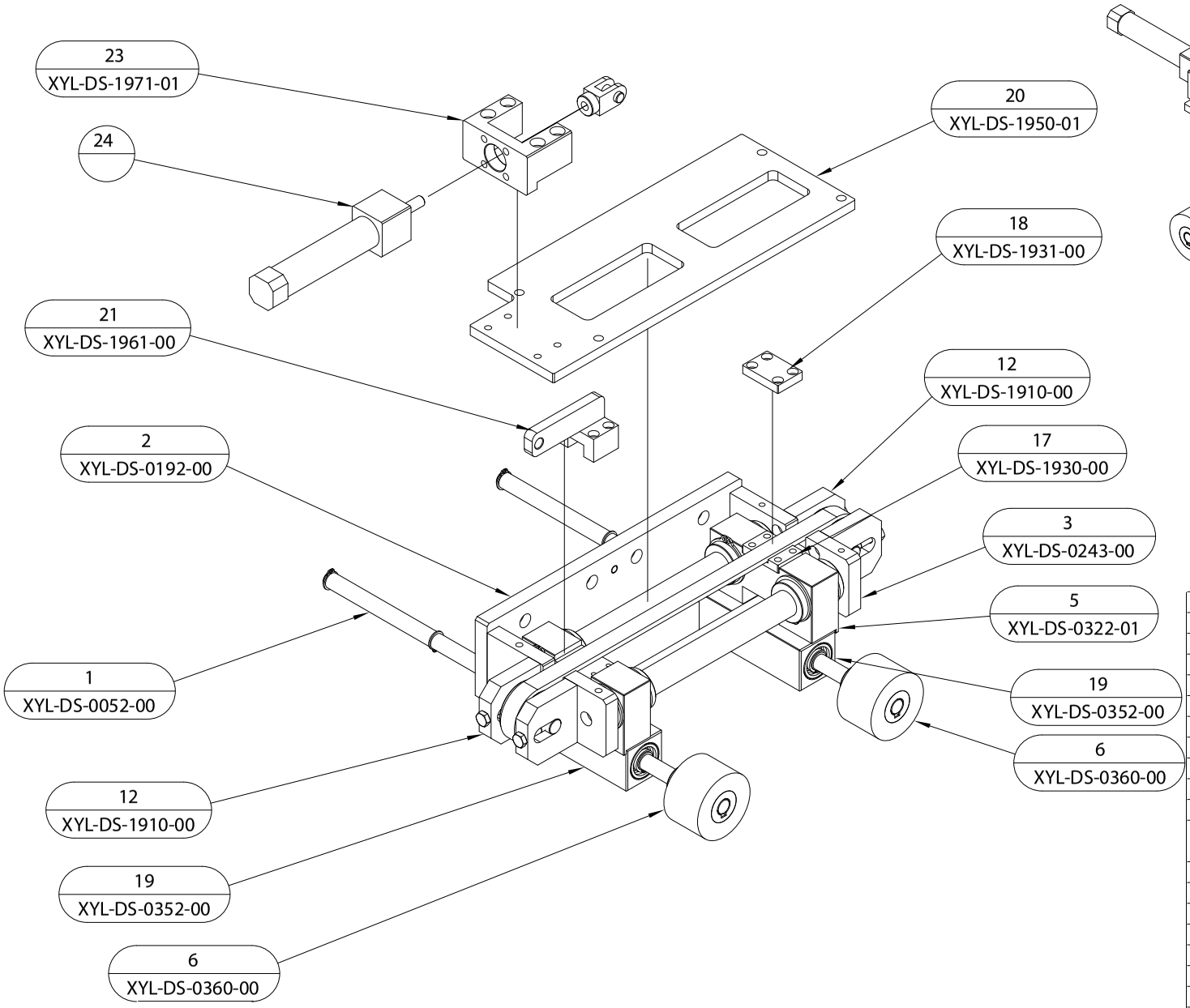

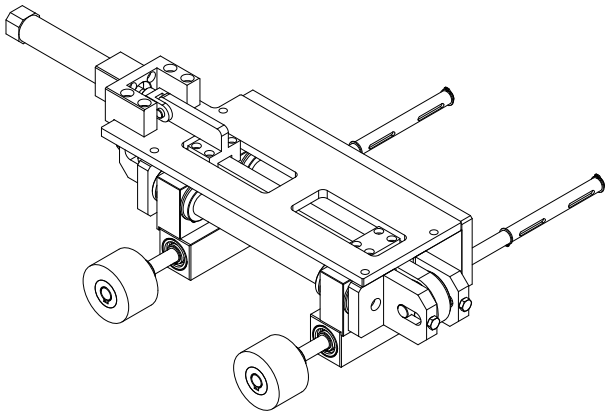

REF #	Specifics	Part Number	QTY
23	XYL-DS-1971-01	130021971101	1
21	XYL-DS-1961-01	130021961101	1
20	XYL-DS-1950-01	130021950101	1
19	XYL-DS-0352-00	130020352100	2
18	XYL-DS-1931-00	130021931100	2
17	XYL-DS-1930-00	130021930100	2
16			1
15			4
14	XYL-DS-1920-00	132021920100	2
13	XYL-DS-1833-00	132021833100	2
12	XYL-DS-1910-00	130021910100	4
11	bearing LM-20UU-20X32X42	16641020027	4
10	plug D6*25L	132JA058000	2
9	snap ring	B0300018	8
8	snap ring	B0300009	12
7	6001ZZ-12X28X8	16641000004	12
6	XYL-DS-0360-00	130020360400	2
5	XYL-DS-0322-01	130020322101	2
4	XYL-DS-0290-00	132020290400	2
3	XYL-DS-0243-00	130020243100	2
2	XYL-DS-0192-00	130020192100	1
1	XYL-DS-0052-00	132020052100	2

Drive Section - Sub Module 2

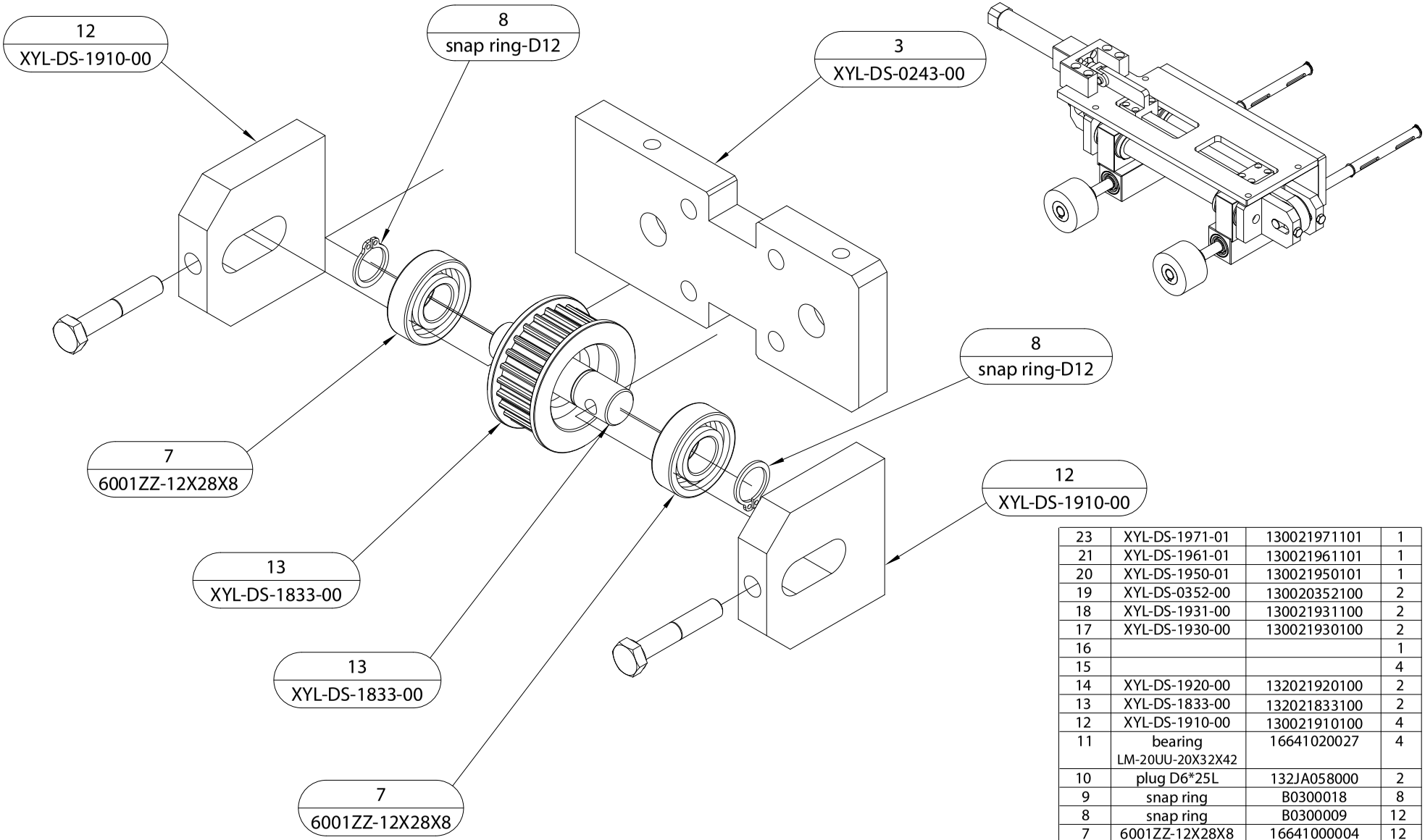

REF #	Specifics	Part Number	QTY
23	XYL-DS-1971-01	130021971101	1
21	XYL-DS-1961-01	130021961101	1
20	XYL-DS-1950-01	130021950101	1
19	XYL-DS-0352-00	130020352100	2
18	XYL-DS-1931-00	130021931100	2
17	XYL-DS-1930-00	130021930100	2
16			1
15			4
14	XYL-DS-1920-00	132021920100	2
13	XYL-DS-1833-00	132021833100	2
12	XYL-DS-1910-00	130021910100	4
11	bearing LM-20UU-20X32X42	16641020027	4
10	plug D6*25L	132JA058000	2
9	snap ring	B0300018	8
8	snap ring	B0300009	12
7	6001ZZ-12X28X8	16641000004	12
6	XYL-DS-0360-00	130020360400	2
5	XYL-DS-0322-01	130020322101	2
4	XYL-DS-0290-00	132020290400	2
3	XYL-DS-0243-00	130020243100	2
2	XYL-DS-0192-00	130020192100	1
1	XYL-DS-0052-00	132020052100	2

Drive Section - Sub Module 3

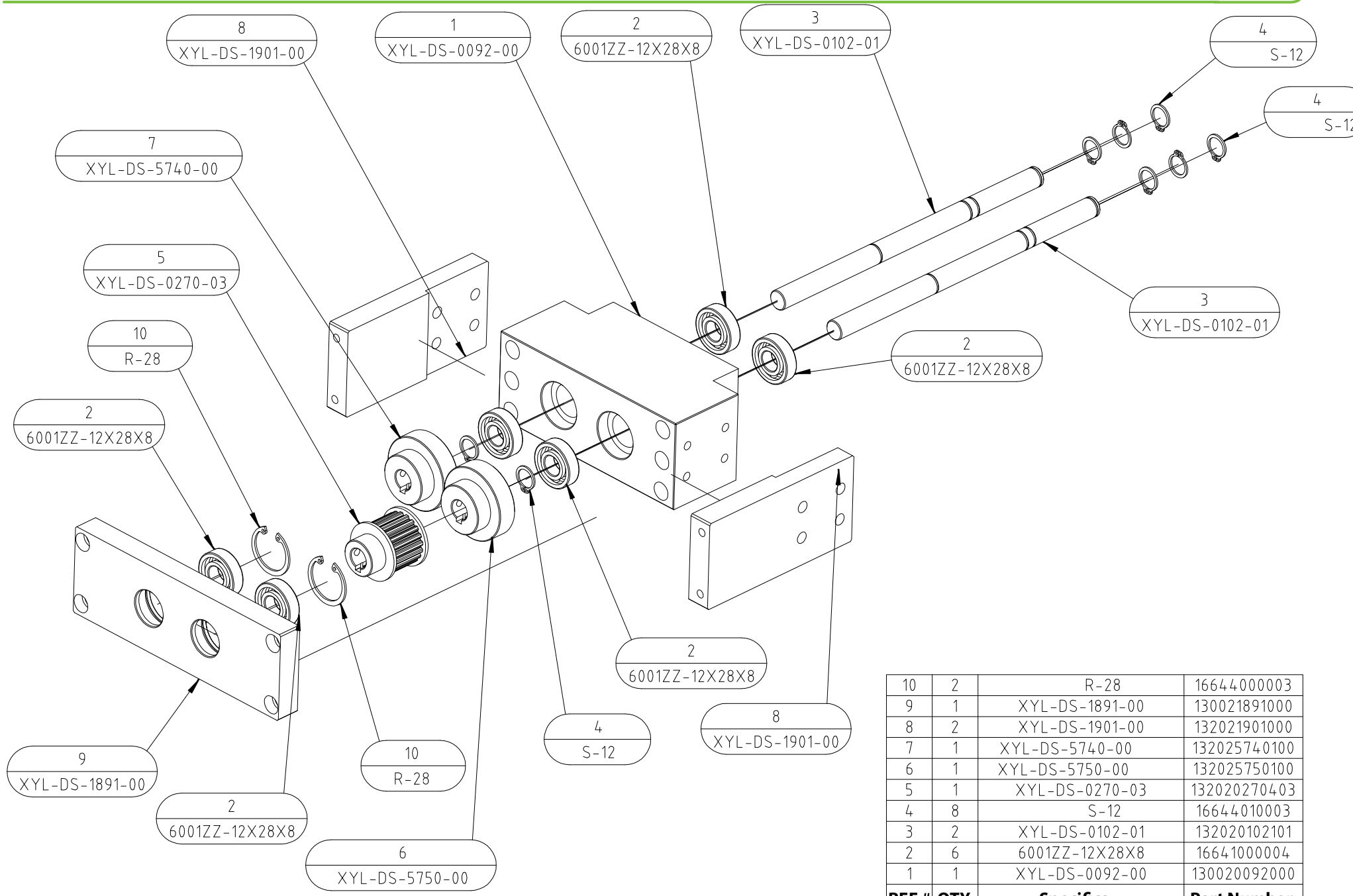

REF #	QTY	Specifics	Part Number
10	2	R-28	16644000003
9	1	XYL-DS-1891-00	130021891000
8	2	XYL-DS-1901-00	132021901000
7	1	XYL-DS-5740-00	132025740100
6	1	XYL-DS-5750-00	132025750100
5	1	XYL-DS-0270-03	132020270403
4	8	S-12	16644010003
3	2	XYL-DS-0102-01	132020102101
2	6	6001ZZ-12X28X8	16641000004
1	1	XYL-DS-0092-00	130020092000

Drive Section 1

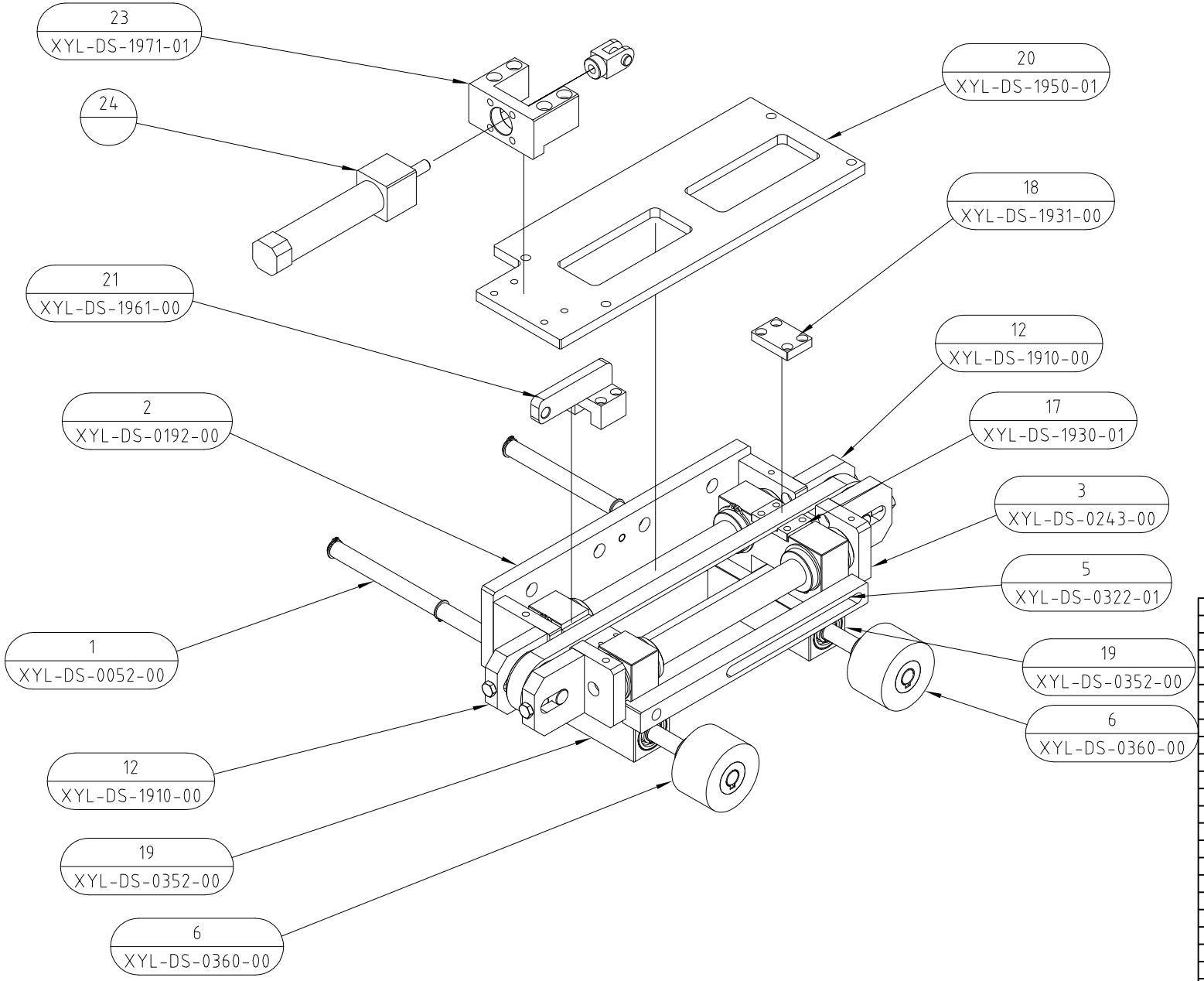

REF #	Specifics	Part Number	QTY
25	XYL-DS-0301-00	130020301100	1
24	CDM2RB-20-60	16650000023	1
23	XYL-DS-1971-01	130021971101	1
21	XYL-DS-1961-00	130021961101	1
20	XYL-DS-1950-01	130021950101	1
19	XYL-DS-0352-00	130020352100	2
18	XYL-DS-1931-00	130021931100	2
17	XYL-DS-1930-01	130021930101	2
16			1
15			4
14	XYL-DS-1920-00	130020301100	2
13	XYL-DS-1833-00	132021833100	2
12	XYL-DS-1910-00	130021910100	4
11	LM-20UU	16641020005	4
10	D6×25L		2
9	i32X1.6	16644010012	8
8	12	16644010003	12
7	6001ZZ-12X28X8	16641000004	12
6	XYL-DS-0360-00	130020360400	2
5	XYL-DS-0322-01	130020322101	2
4	XYL-DS-0290-00	132020290400	2
3	XYL-DS-0243-00	130020243100	2
2	XYL-DS-0192-00	130020192100	1
1	XYL-DS-0052-00	132020052100	2

Drive Section 2

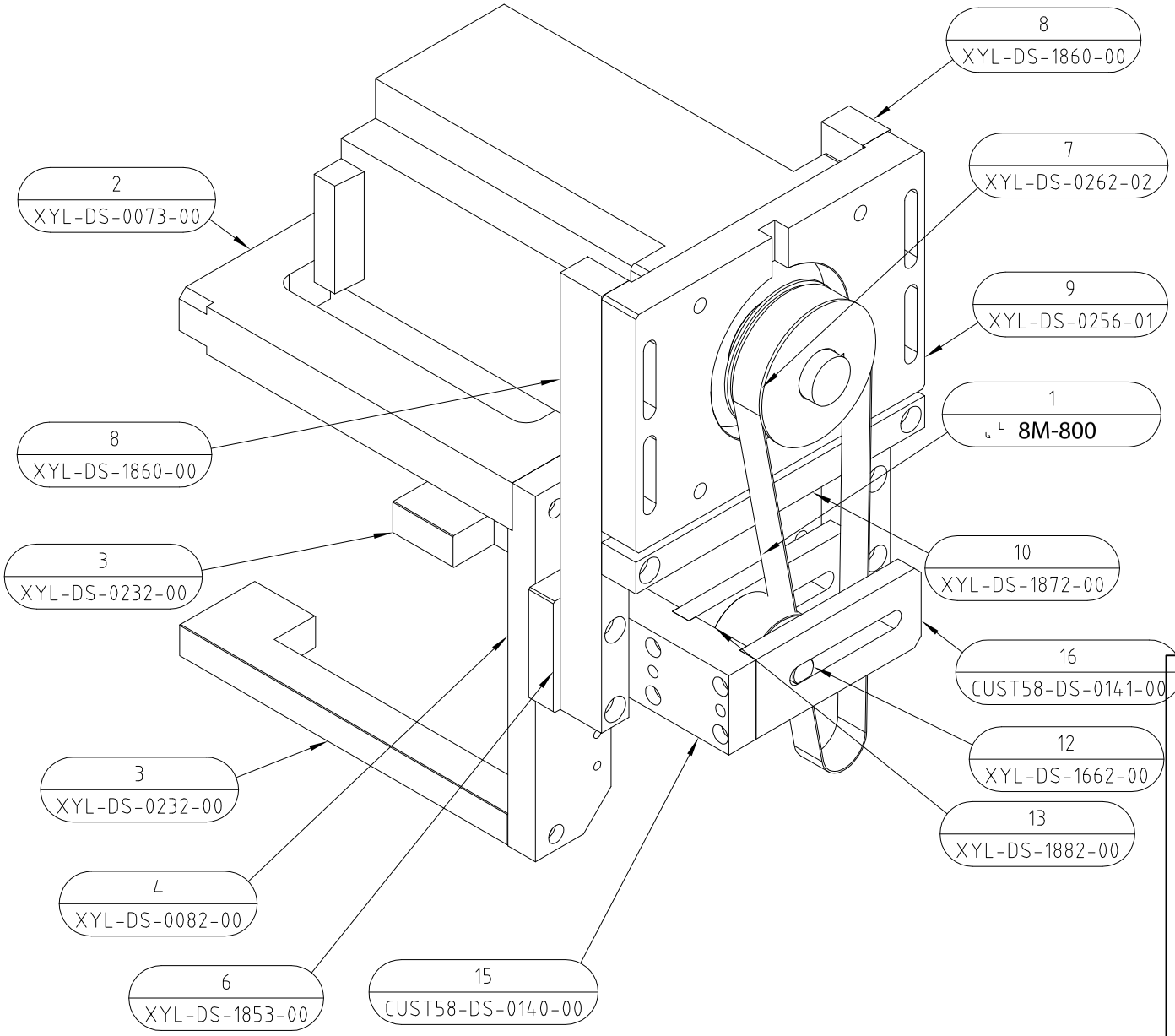

REF #	Specifics	Part Number	QTY
18	MPL-B540K-MJ72AA	16760030090	1
16	CUST58-DS-0141-00	1320201412T58	2
15	CUST58-DS-0140-00	1320201402T58	1
14	15	16644010004	2
13	XYL-DS-1882-00	130021882000	1
12	XYL-DS-1662-00	132021662000	1
11	6002ZZ-15X32X9	16641000005	2
10	XYL-DS-1872-00	132021872100	1
9	XYL-DS-0256-01	130020256101	1
8	XYL-DS-1860-01	132021860101	2
7	XYL-DS-0262-02	130020262002	1
6	XYL-DS-1853-00	130021853100	1
4	XYL-DS-0082-00	130020082000	1
3	XYL-DS-0232-00	130020232100	2
2	XYL-DS-0073-00	130020073100	1
1	8M-800	16640120046	1

Drive Section 3

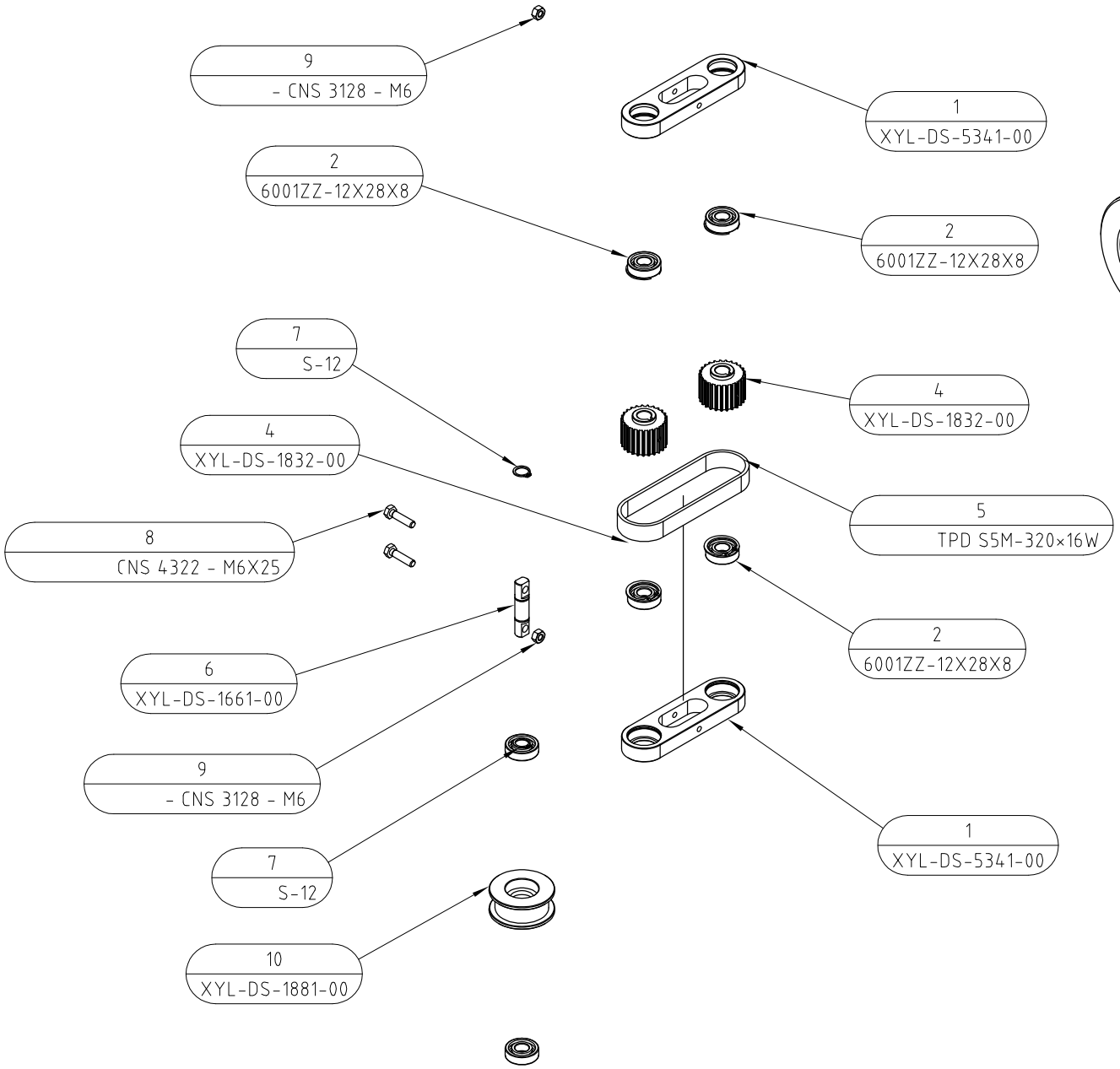

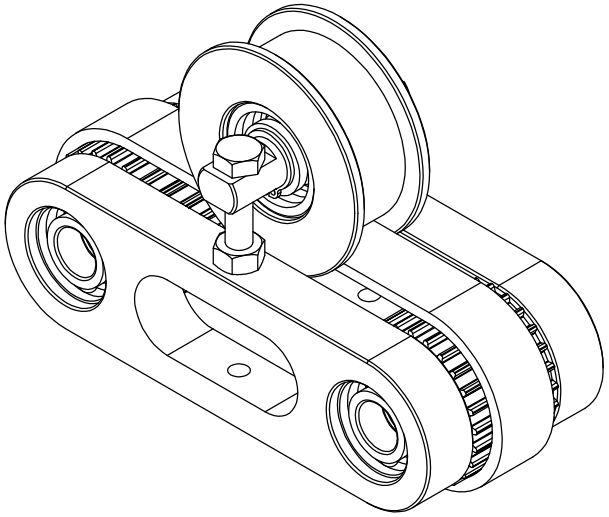

REF #	QTY	Specifics	Part Number
10	1	XYL-DS-1881-00	130021881100
9	2	CNS 3128 M6	
8	2	CNS 4322 - M6X25	
7	2	S-12	16644010003
6	1	XYL-DS-1661-00	132021661100
5	1	STPD S5M-320×16W	16640120022
4	2	XYL-DS-1832-00	130021832100
3	4	S-28	16644010021
2	6	6001ZZ-12X28X8	16641000004
1	2	XYL-DS-5341-00	130025341100

Drive Section 4

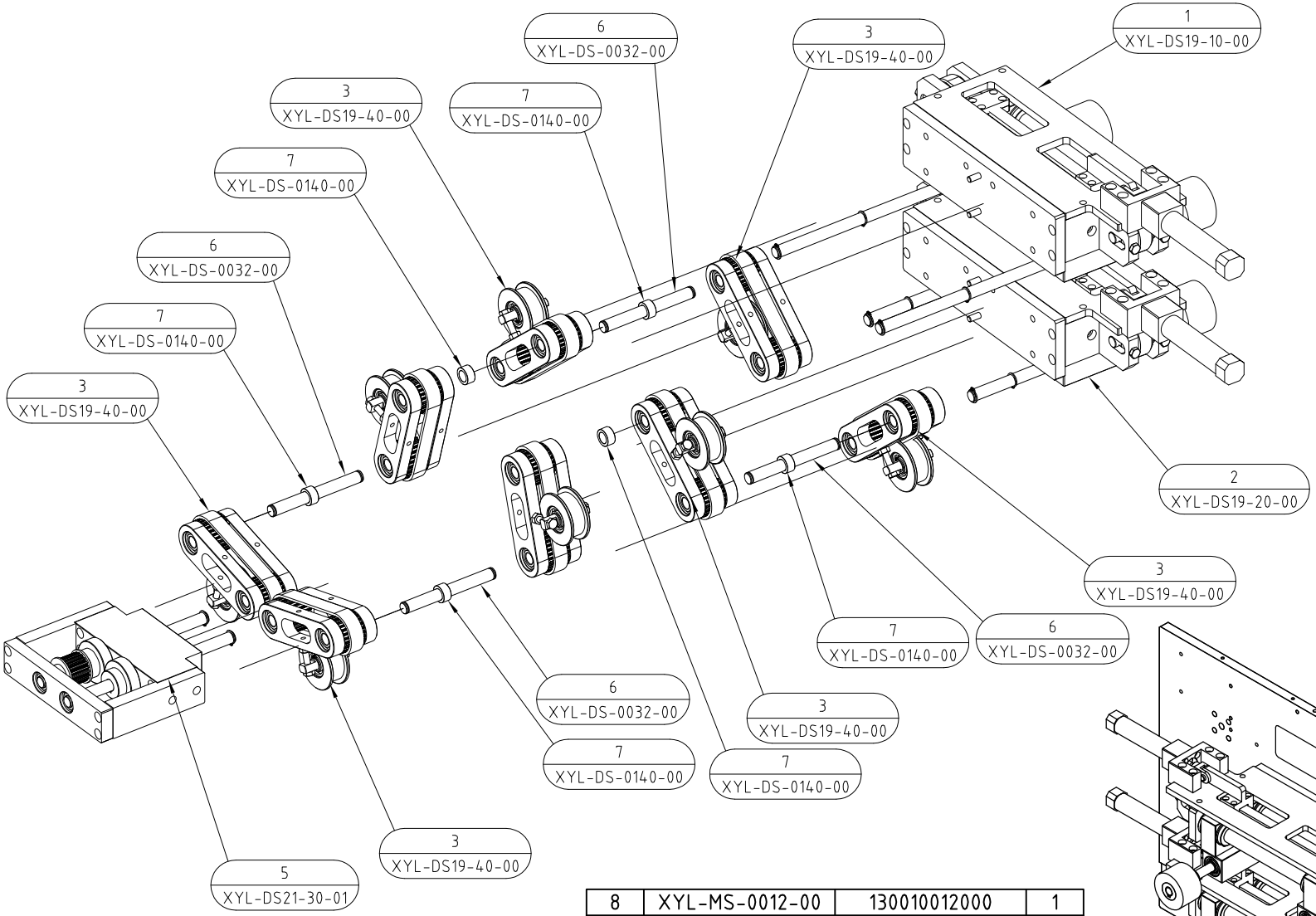

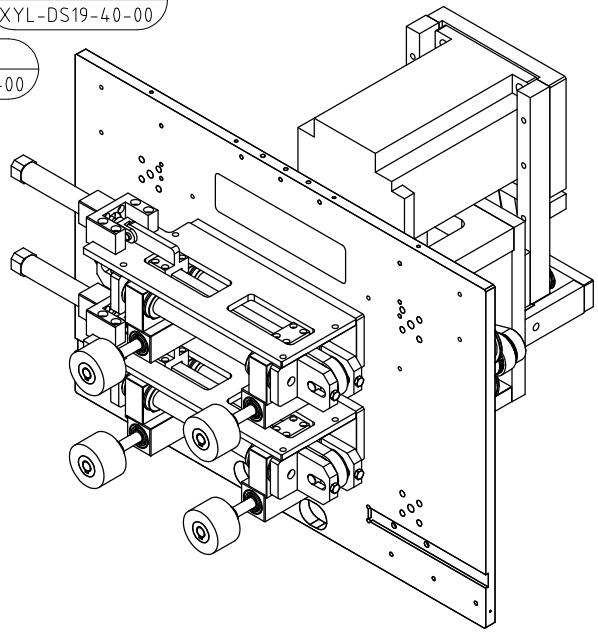

REF #	Specifics	Part Number	QTY
8	XYL-MS-0012-00	130010012000	1
7	XYL-DS-0140-00	132020140400	6
6	XYL-DS-0032-00	132020032100	4
5	XYL-DS21-30-01	**See Drive Section 7**	1
4	XYL-DS19-50-00		1
3	XYL-DS19-40-00	**See Drive Section 3**	8
2	XYL-DS19-20-00	**See Drive Section 2**	1
1	XYL-DS19-10-00	**See Drive Section 1**	1

Drive Section 7

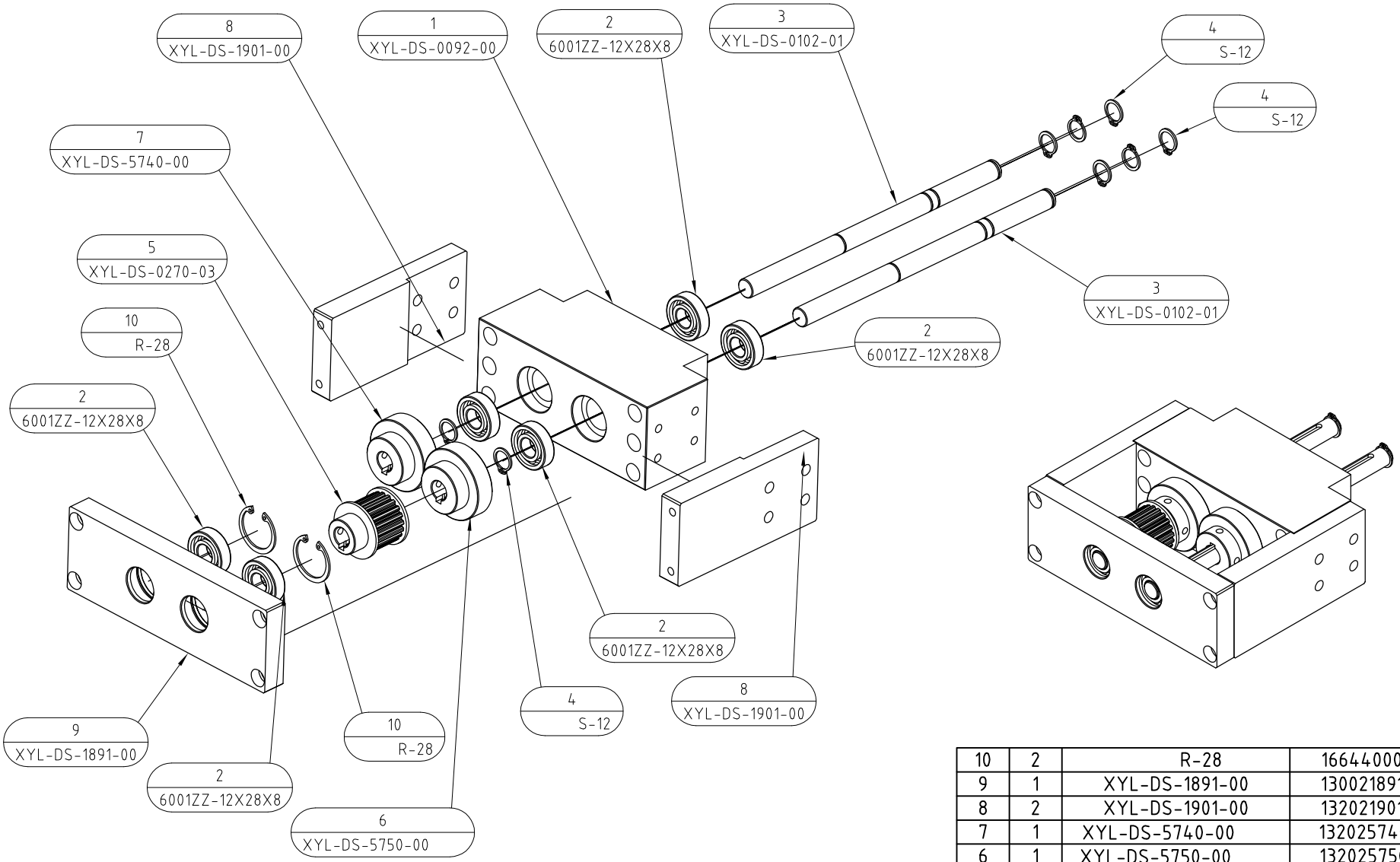

REF #	QTY	Specifics	Part Number
10	2	R-28	16644000003
9	1	XYL-DS-1891-00	130021891000
8	2	XYL-DS-1901-00	132021901000
7	1	XYL-DS-5740-00	132025740100
6	1	XYL-DS-5750-00	132025750100
5	1	XYL-DS-0270-03	132020270403
4	8	S-12	16644010003
3	2	XYL-DS-0102-01	132020102101
2	6	6001ZZ-12X28X8	16641000004
1	1	XYL-DS-0092-00	130020092000

Film Unwinder FU20-00-08

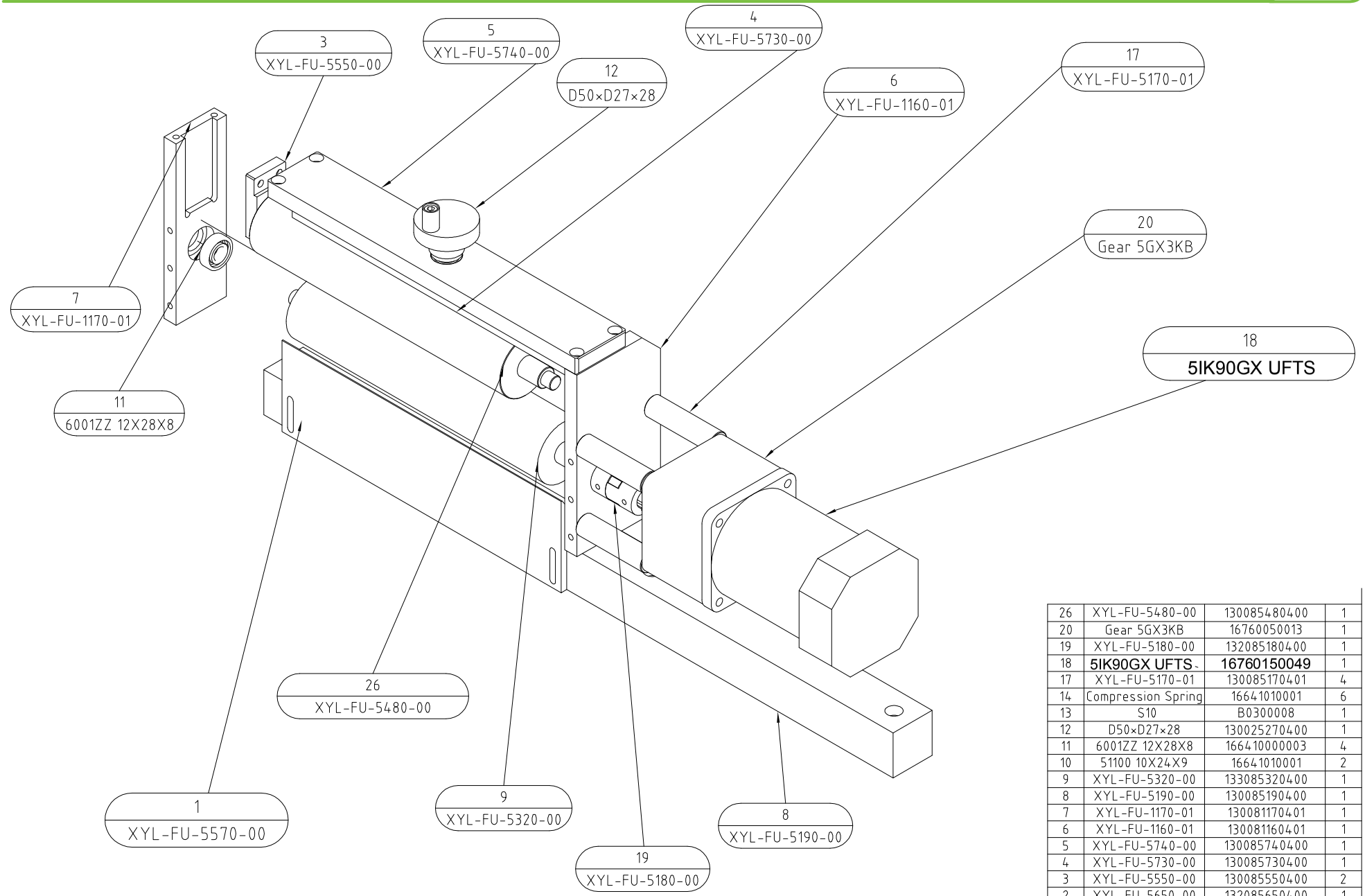

REF #	Specifics	Part Number	QTY
26	XYL-FU-5480-00	130085480400	1
20	Gear 5GX3KB	16760050013	1
19	XYL-FU-5180-00	132085180400	1
18	5IK90GX UFTS	16760150049	1
17	XYL-FU-5170-01	130085170401	4
14	Compression Spring	16641010001	6
13	S10	B0300008	1
12	D50×D27×28	130025270400	1
11	6001ZZ 12X28X8	166410000003	4
10	51100 10X24X9	16641010001	2
9	XYL-FU-5320-00	133085320400	1
8	XYL-FU-5190-00	130085190400	1
7	XYL-FU-1170-01	130081170401	1
6	XYL-FU-1160-01	130081160401	1
5	XYL-FU-5740-00	130085740400	1
4	XYL-FU-5730-00	130085730400	1
3	XYL-FU-5550-00	130085550400	2
2	XYL-FU-5650-00	132085650400	1
1	XYL-FU-5570-00	130085570400	1

Film Unwinder / Dancer

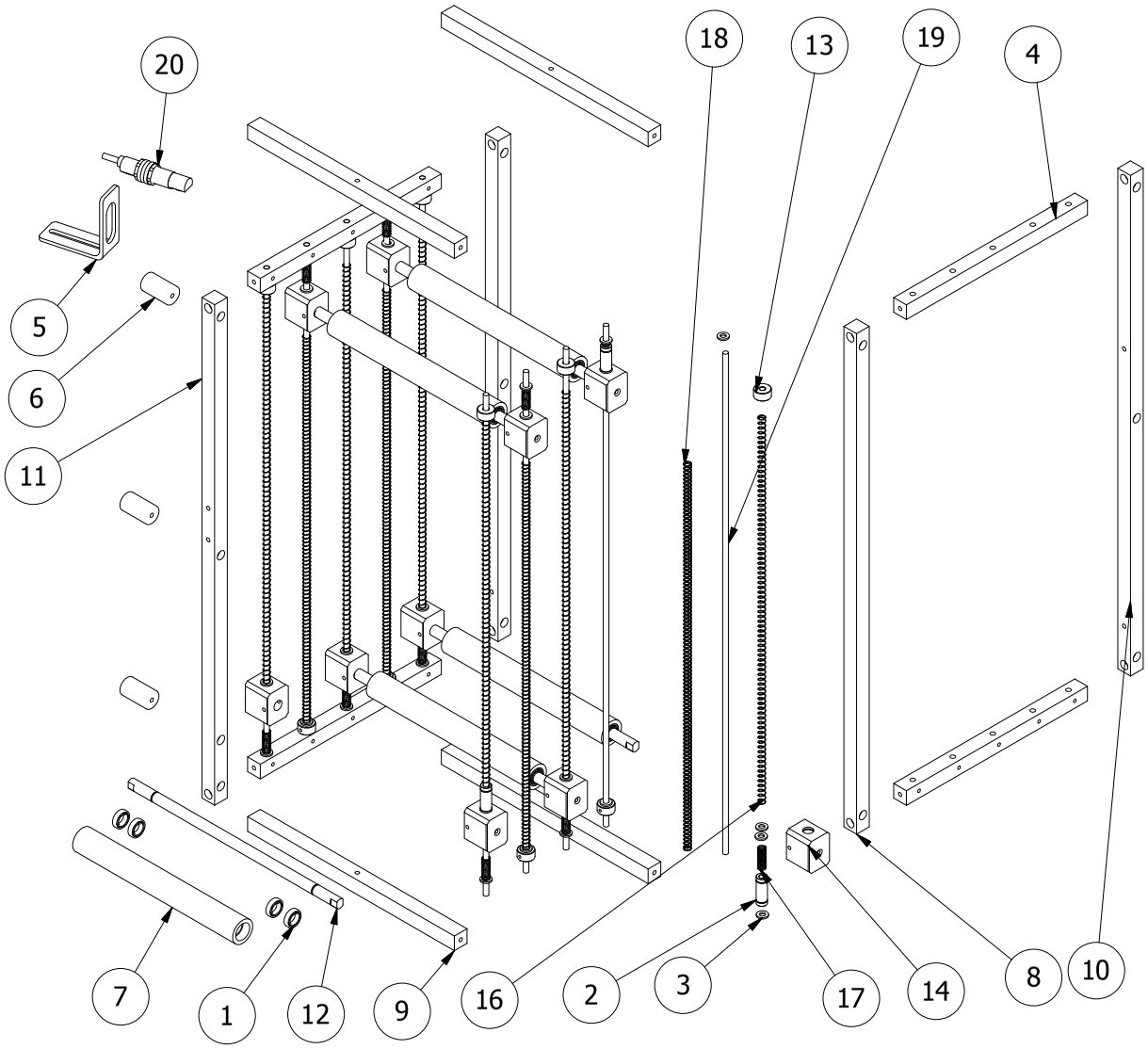

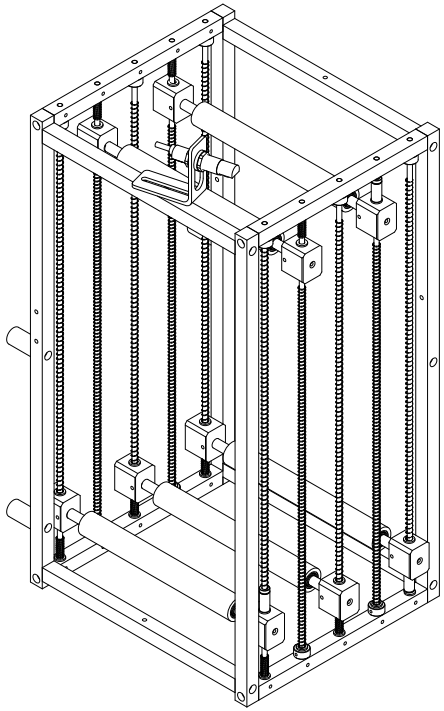

REF #	QTY	Specifics	Part Number
1	20	6801ZZ 12X21X5	16641000030
2	10	LM-L 6UU 6X12X35	16641020007
3	40	M6(16*7*1)	B0300080
4	4	XYL-FU-5460-00	130085460000
5	1	XYL-FU-5470-00	132085470400
6	3	XYL-FU-5530-00	132085530400
7	5	XYL-FU-5540-01	133085540401
8	1	XYL-FU-5760-00	130085760000
9	4	XYL-FU-5770-00	130085770400
10	2	XYL-FU-5780-00	130085780400
11	1	XYL-FU-5820-00	130085820400
12	5	XYL-FU-5850-00	132085850400
13	10	XYL-FU-5890-00	130085890400
14	10	XYL-FU-5900-00	130085900400
15	1	XYL-FU4-00-07	16762040001
16	6	6.1*0.8*L600*pitch 2	16648010019
17	10	6.1*1.0*L35*pitch 2	16648010021
18	4	6.1*1.0*L600*pitch 2	16648010065
19	10	D6 650	B0700013

60M Cabinet FU25-00-13

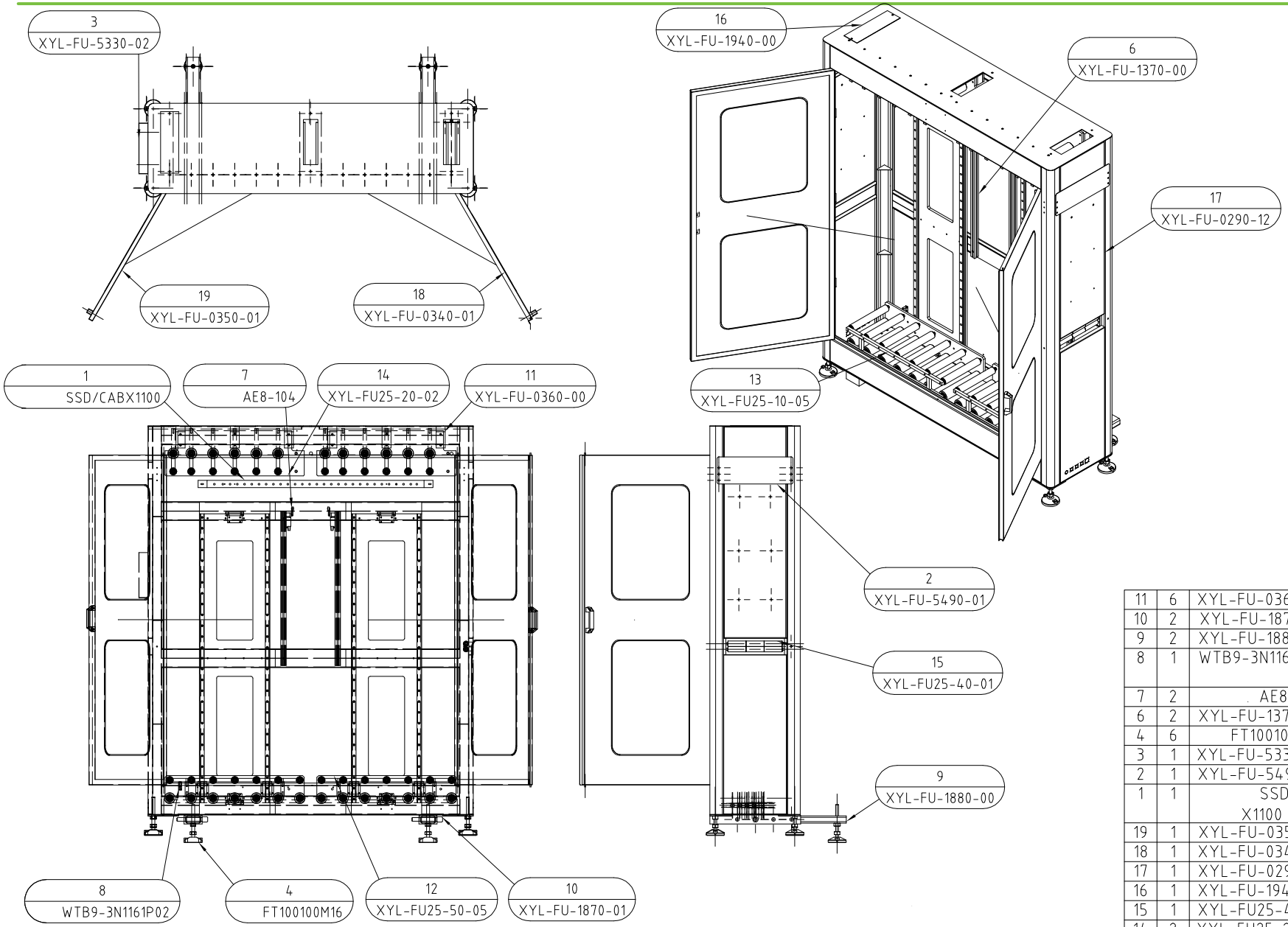

REF #	QTY	Specifics	Part Number
11	6	XYL-FU-0360-00	130080360400
10	2	XYL-FU-1870-01	132081870001
9	2	XYL-FU-1880-00	132081880000
8	1	WTB9-3N1161P02	16762080004
7	2	AE8-104	16762020001
6	2	XYL-FU-1370-00	130081370400
4	6	FT100100M16	1665600008
3	1	XYL-FU-5330-02	132085330402
2	1	XYL-FU-5490-01	132085490401
1	1	SSD/CAB X1100	16768280022
19	1	XYL-FU-0350-01	132080350001
18	1	XYL-FU-0340-01	132080340001
17	1	XYL-FU-0290-12	132080290012
16	1	XYL-FU-1940-00	132081940000
15	1	XYL-FU25-40-01	
14	2	XYL-FU25-20-02	
13	1	XYL-FU25-10-05	
12	1	XYL-FU25-50-05	

60M Cabinet FU25-10-05

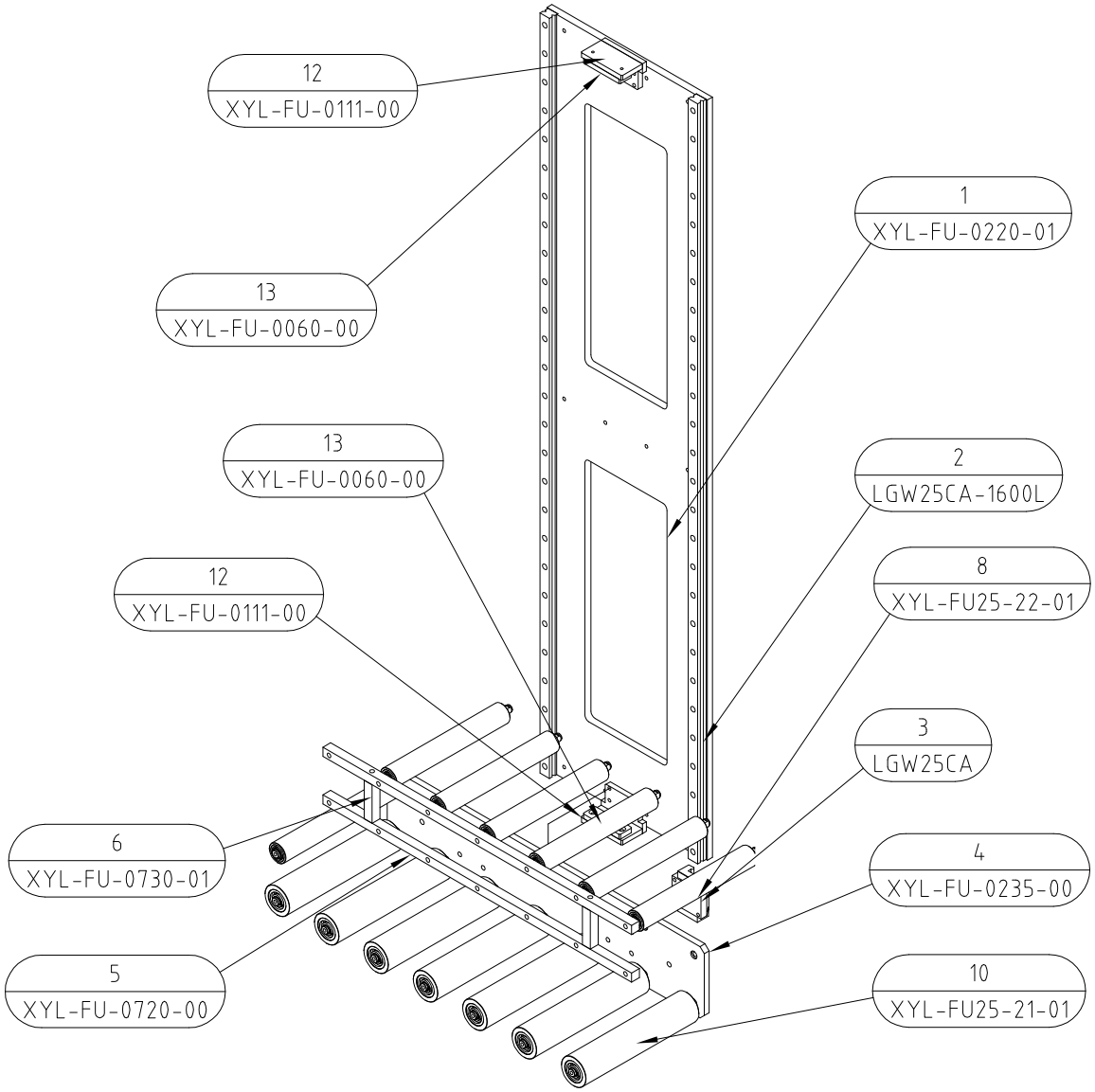

13	2	XYL-FU-0060-00	133080060400
12	2	XYL-FU-0111-00	132080111400
10	7	XYL-FU25-21-01	
8	7	XYL-FU25-22-01	
6	2	XYL-FU-0730-01	130080730001
5	2	XYL-FU-0720-00	130080720000
4	1	XYL-FU-0235-00	130080235000
3	2	LGW25CA	16657010002
2	2	LGW25CA-1600L	16657000002
1	1	XYL-FU-0220-01	132080220401
REF #	**QTY**	**Specifics**	**Part Number**

60M Cabinet FU25-21-01

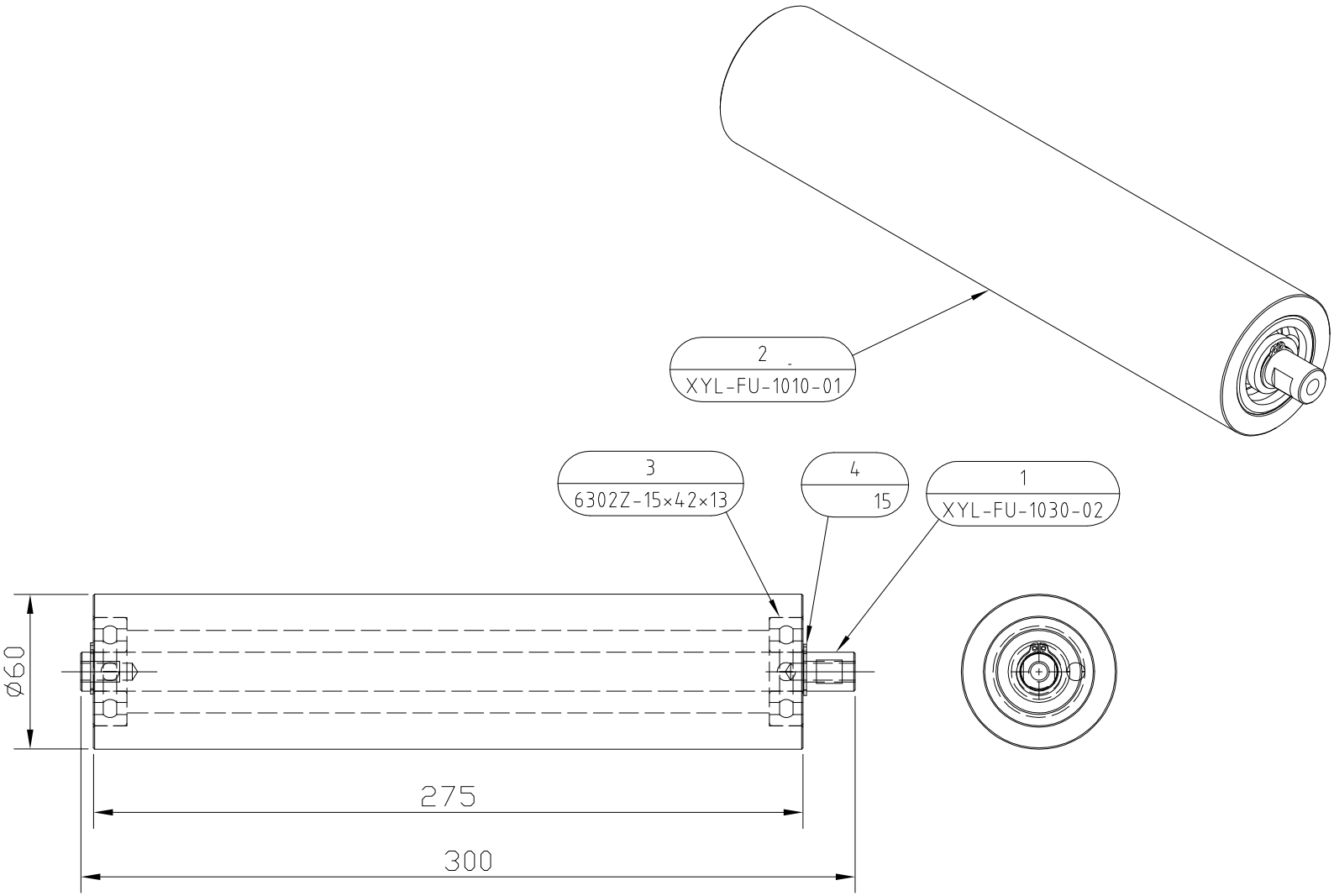

2	4	15	B0300010
2	3	6302Z-15×42×13	16641000027
1	2	XYL-FU-1010-01	133081010401
1	1	XYL-FU-1030-02	132081030402
REF #	**QTY**	**Specifics**	**Part Number**

60M Cabinet FU25-21-01

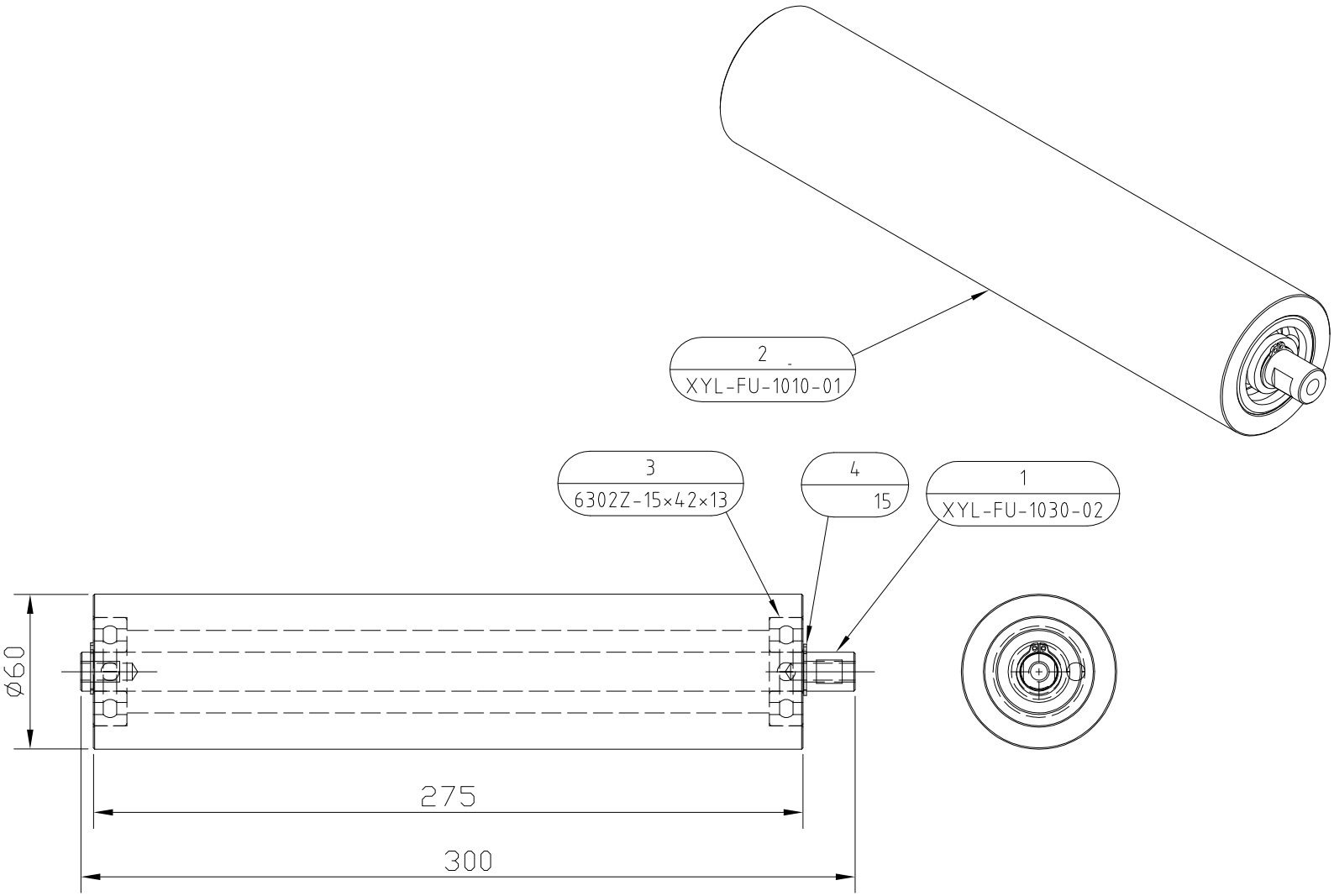

2	4	15	B0300010
2	3	6302Z-15×42×13	16641000027
1	2	XYL-FU-1010-01	133081010401
1	1	XYL-FU-1030-02	132081030402
REF #	**QTY**	**Specifics**	**Part Number**

60M Cabinet FU25-22-01

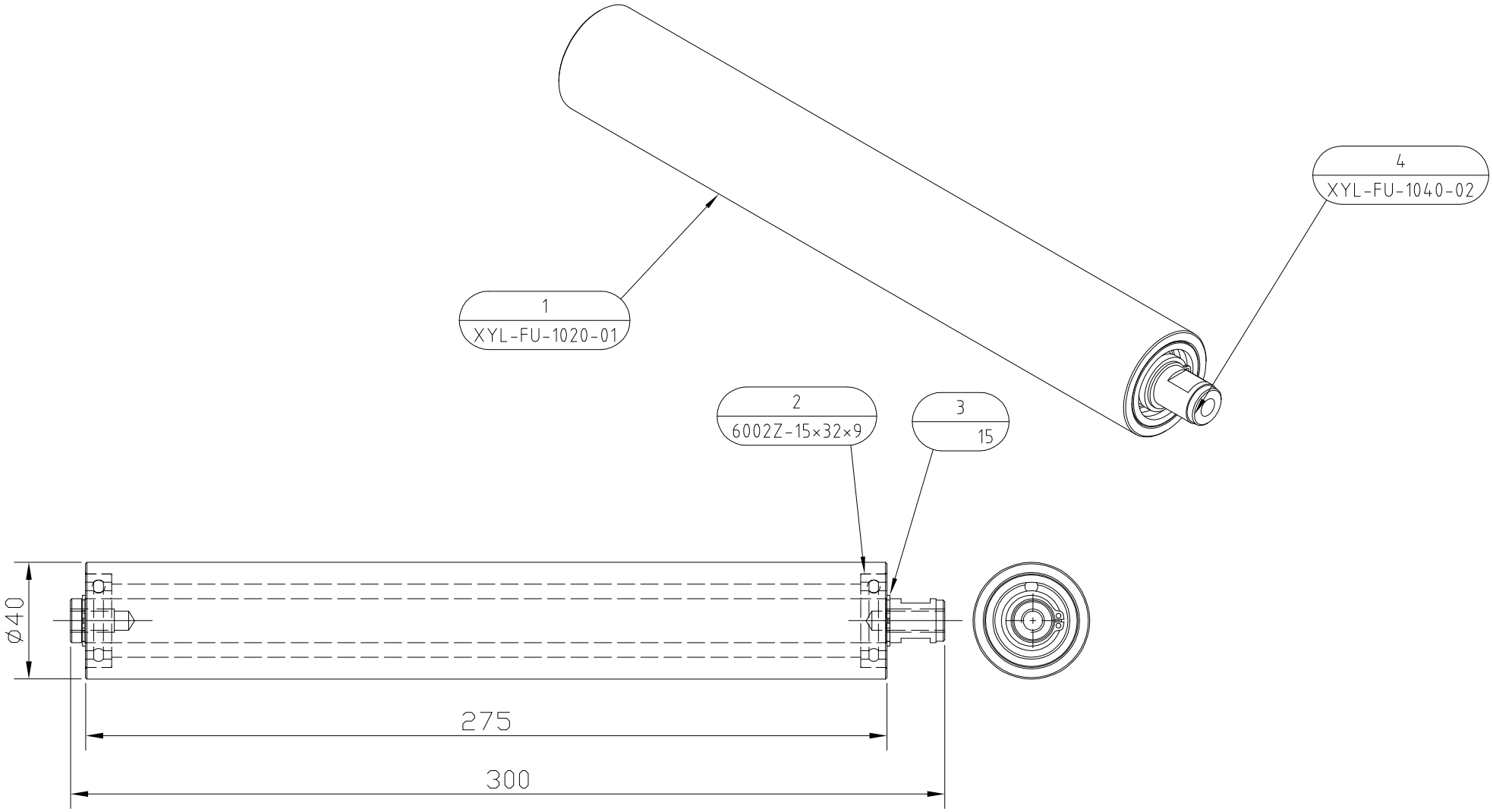

REF #	QTY	Specifics	Part Number
4	1	XYL-FU-1040-02	132081040402
3	2	15	B0300010
2	2	6002Z-15×32×9	16641000083
1	1	XYL-FU-1020-01	133081020401

60M Cabinet FU25-40-01

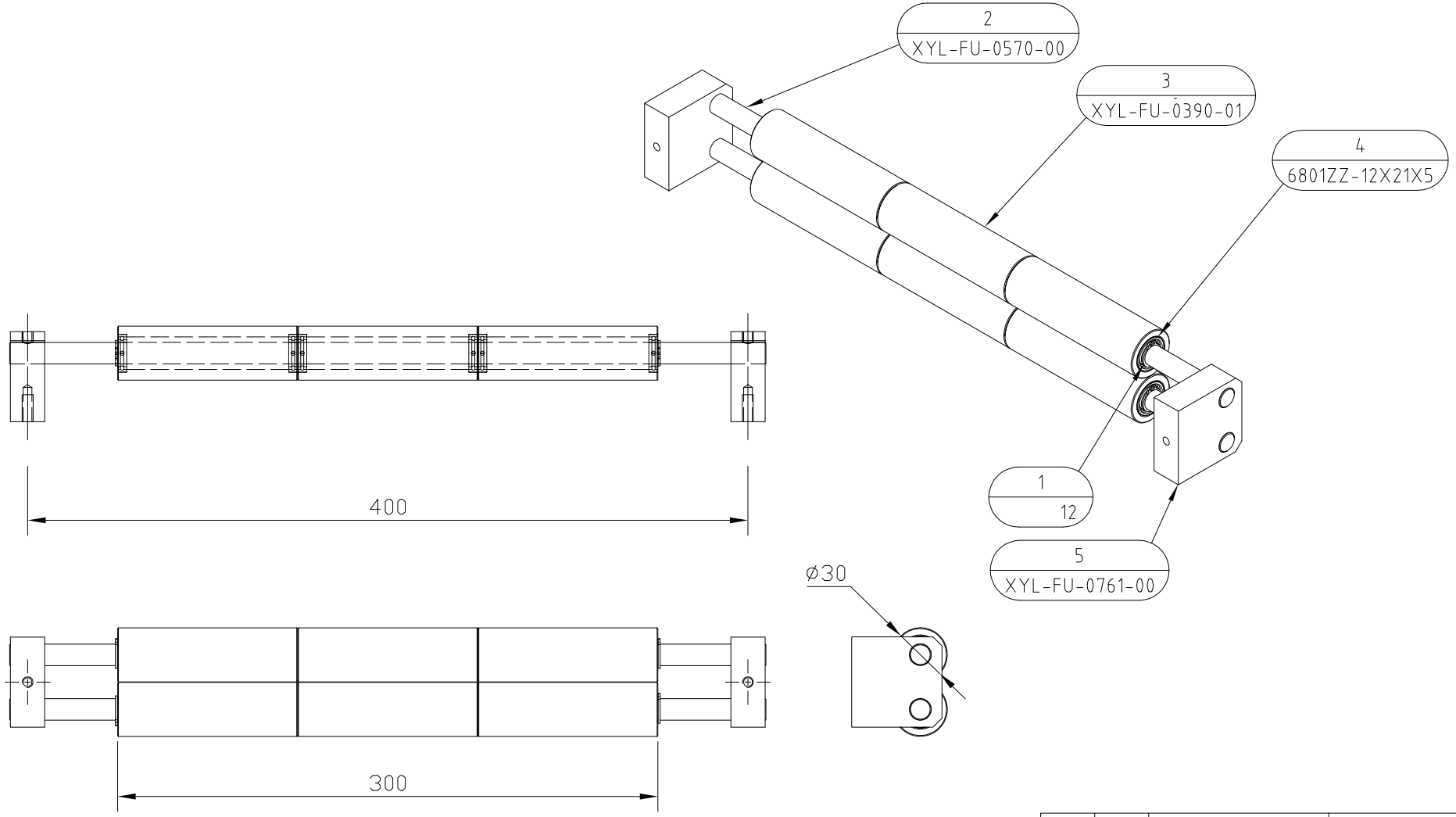

REF #	QTY	Specifics	Part Number
5	2	XYL-FU-0761-00	130080761000
4	12	6801ZZ-12X21X5	16641000031
3	6	XYL-FU-0390-01	133080390401
2	2	XYL-FU-0570-00	132080570400
1	4	12	B0300009

60M Cabinet FU25-50-05

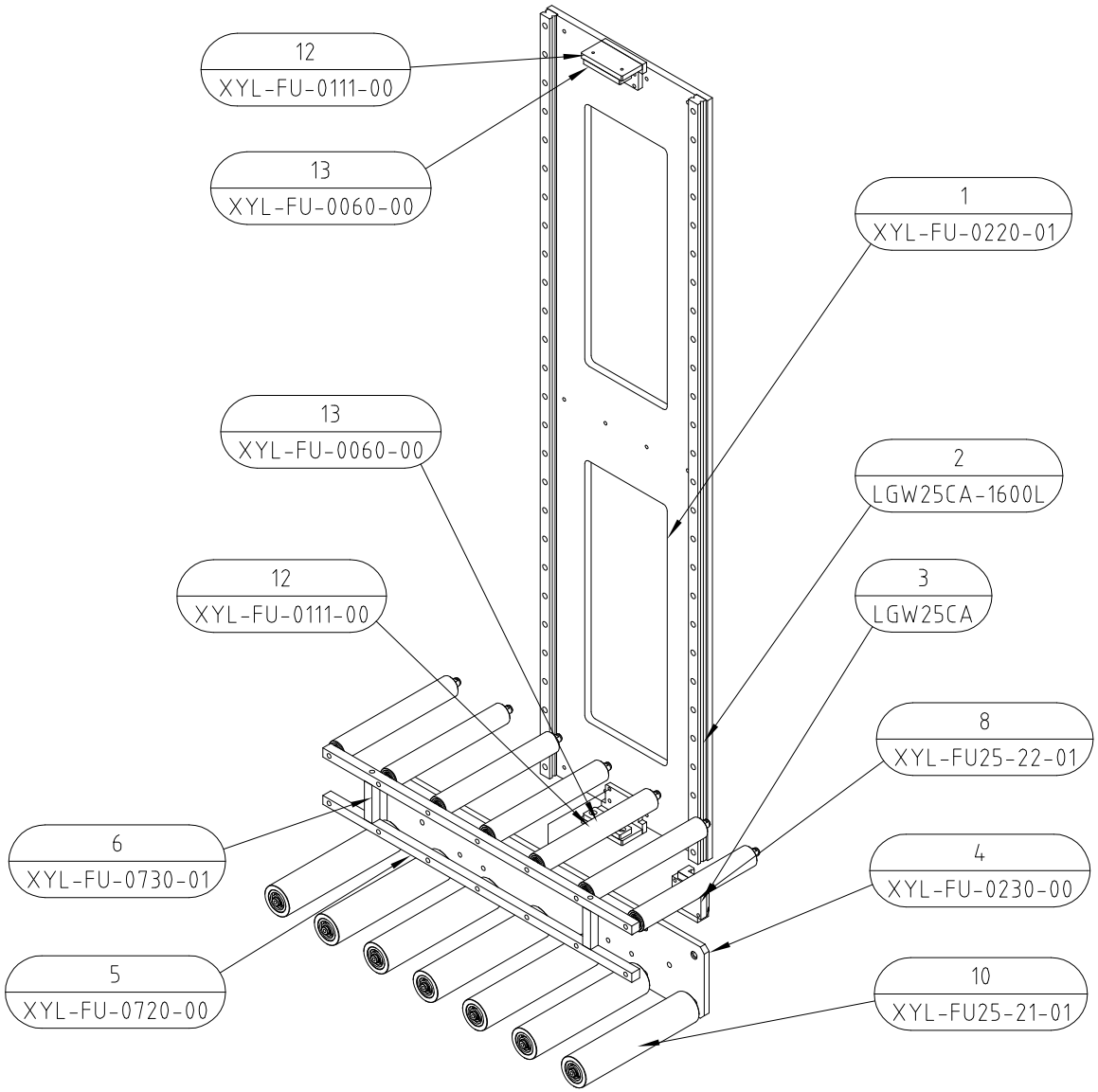

REF #	QTY	Specifics	Part Number
13	2	XYL-FU-0060-00	133080060400
12	2	XYL-FU-0111-00	132080111400
10	7	XYL-FU25-21-01	〃
8	7	XYL-FU25-22-01	〃
6	2	XYL-FU-0730-01	130080730001
5	2	XYL-FU-0720-00	130080720000
4	1	XYL-FU-0230-00	132080230000
3	2	LGW25CA	16657010002
2	2	LGW25CA-1600L	16647000002
1	1	XYL-FU-0220-01	132080220401

Label Sensor

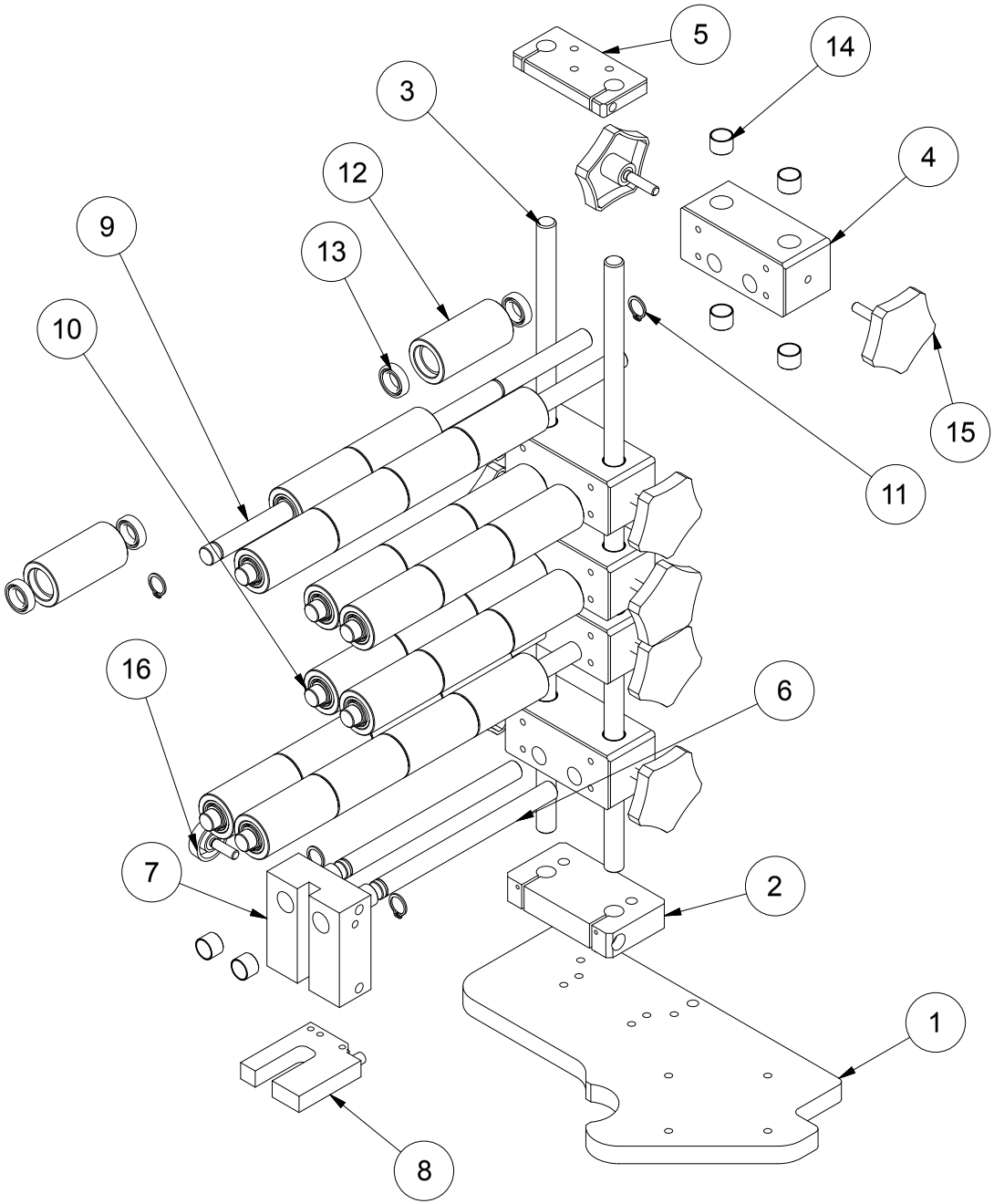

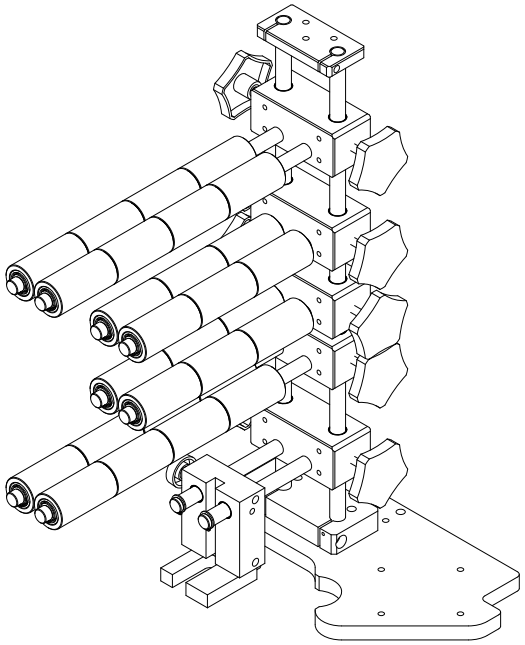

REF #	Specifics	Part Number	QTY
1	XYL-LS-0130-00	130060130000	1
2	XYL-LS-0041-01	130060041401	1
3	D12*450L	16659010024	2
4	XYL-LS-5120-00	130065120400	5
5	XYL-LS-5020-00	130065020400	1
6	XYL-LS-5160-00	132065160400	2
7	XYL-LS-5010-00	130065010000	1
8	WF15-40B410+M8CABLE	16762050001	1
9	XYL-LS-5210-00	132065210400	4
10	XYL-LS-5200-00	132065200000	4
11	S-12	B0300009	18
12	XYL-LS-5110-01	133065110401	28
13	6801ZZ(12*21*5)	16641000030	56
14	BN-1210(SFI-1210)	16641140001	24
15	M6 Handle (big)	16655000002	10
16	M6 Handle(small)	16655000003	1

Machine Section

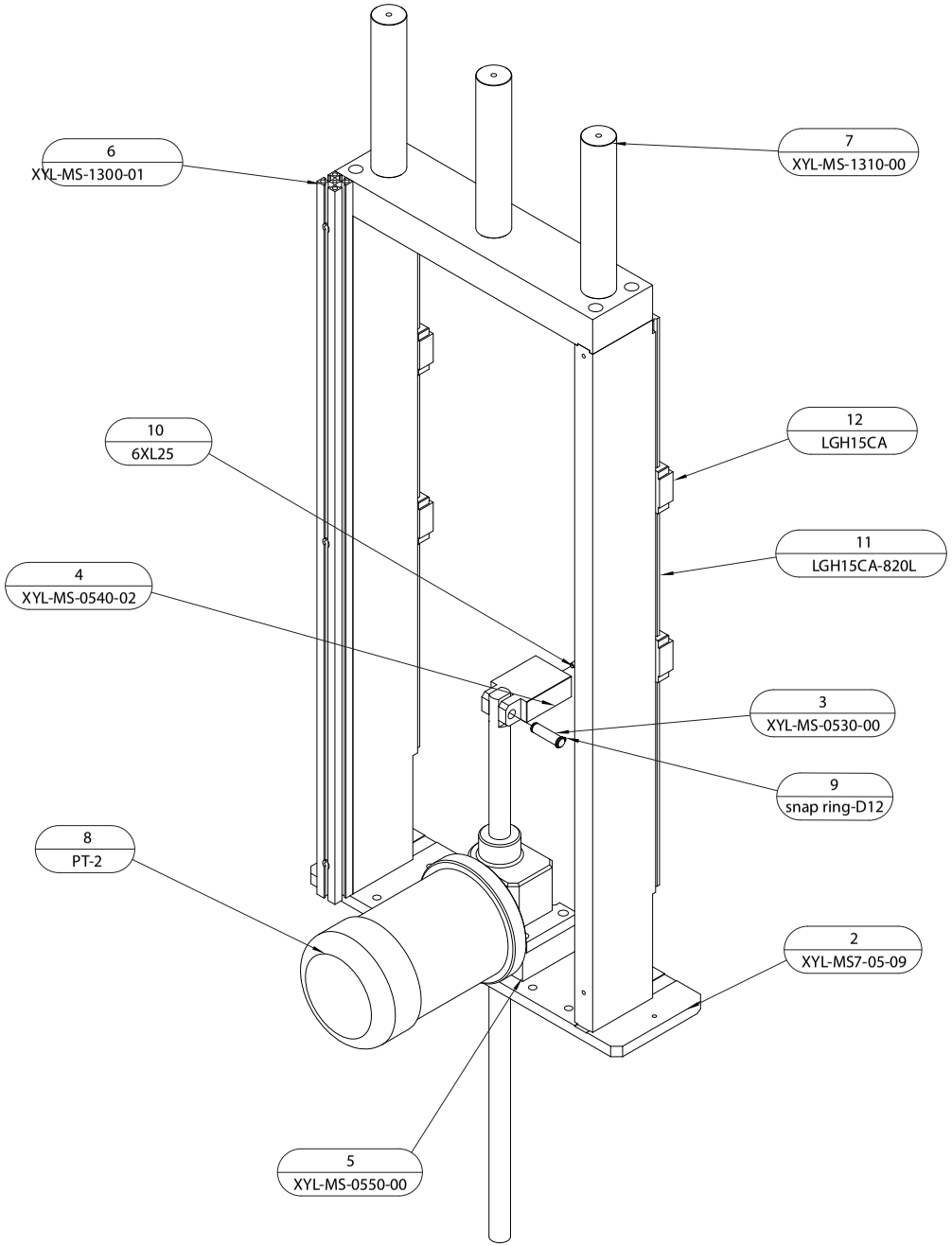

REF #	Specifics	Part Number	QTY
12	LGH15CA	16657010005	4
11	LGH15CA-820 L	16657000004	2
10	6XL25	132JA058000	1
9	snap ring-D12	B0300009	2
8	PT-2	16760060011	1
7	XYL-MS-1310-01	132011310401	3
6	XYL-MS-1300-01	130011300401	1
5	XYL-MS-0550-00	130010550400	2
4	XYL-MS-0540-02	132010540402	1
3	XYL-MS-0530-00	132010530400	1
2	XYL-MS7-05-09	sub-module	1

Mandrel - FS1, SSL-100, SSL-250, SSL-450, SSL-600, SSL-600i

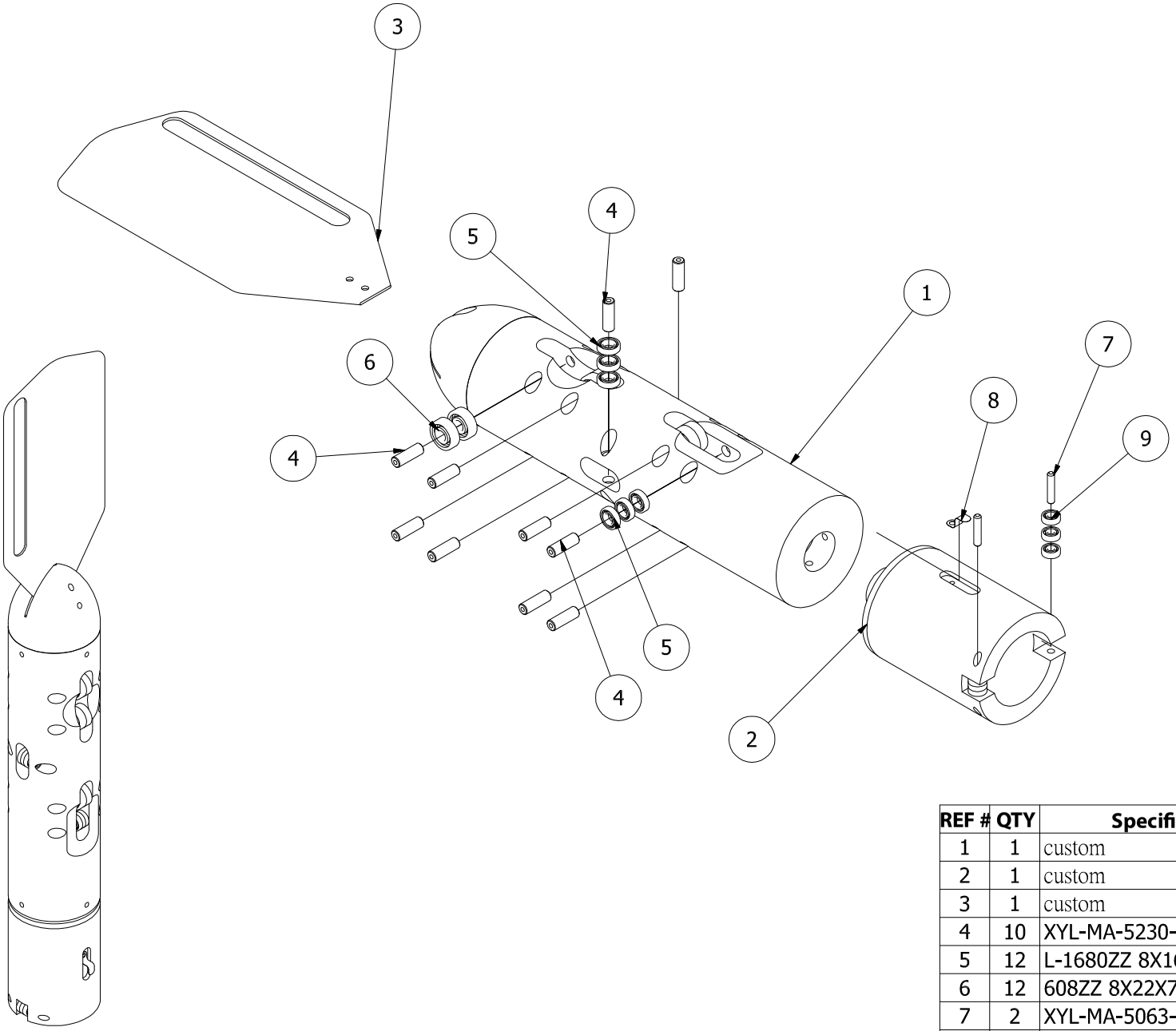

REF #	QTY	Specifics	Part Number
1	1	custom	custom
2	1	custom	custom
3	1	custom	custom
4	10	XYL-MA-5230-01	132055230401
5	12	L-1680ZZ 8X16X5	16641180006
6	12	608ZZ 8X22X7	16641000013
7	2	XYL-MA-5063-00	132055063400
8	2	XYL-MA-5250-00	131055250400
9	6	695 5X13X4	16641170001

Product Sensor 2

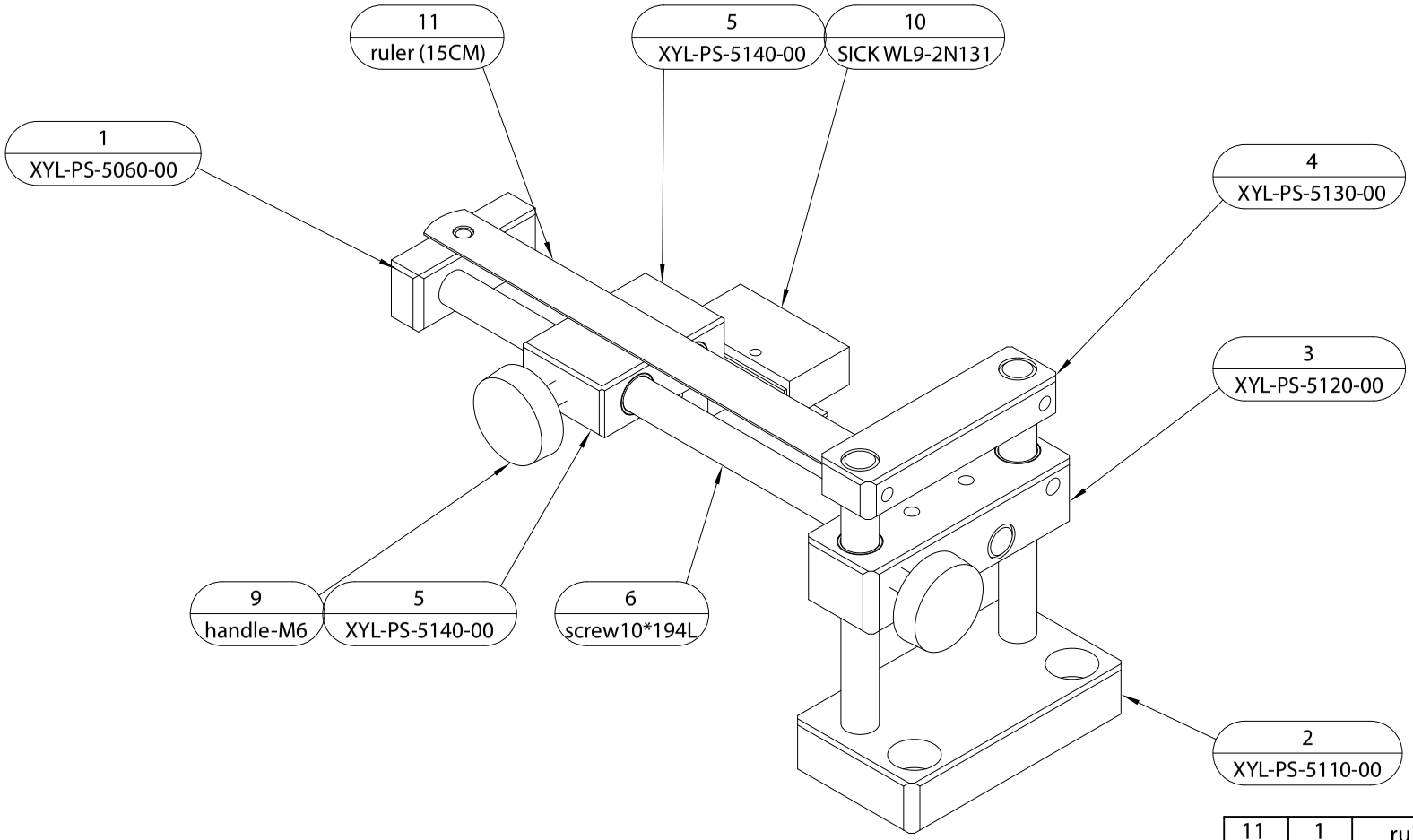

REF #	QTY	Specifics	Part Number
11	1	ruler (15CM)	16649270005
10	1	WL9G-3N1132P05+P250F	16762080003
9	2	handle-M6	16655000003
8	8	BM-1010 10X12X10	16641130003
7	2	screw 10*100L	
6	2	screw 10*194L	
5	1	XYL-PS-5140-00	130105140400
4	1	XYL-PS-5130-00	130105130400
3	1	XYL-PS-5120-00	130105120400
2	1	XYL-PS-5110-00	130105110400
1	1	XYL-PS-5060-00	130105060400

Product Sensor

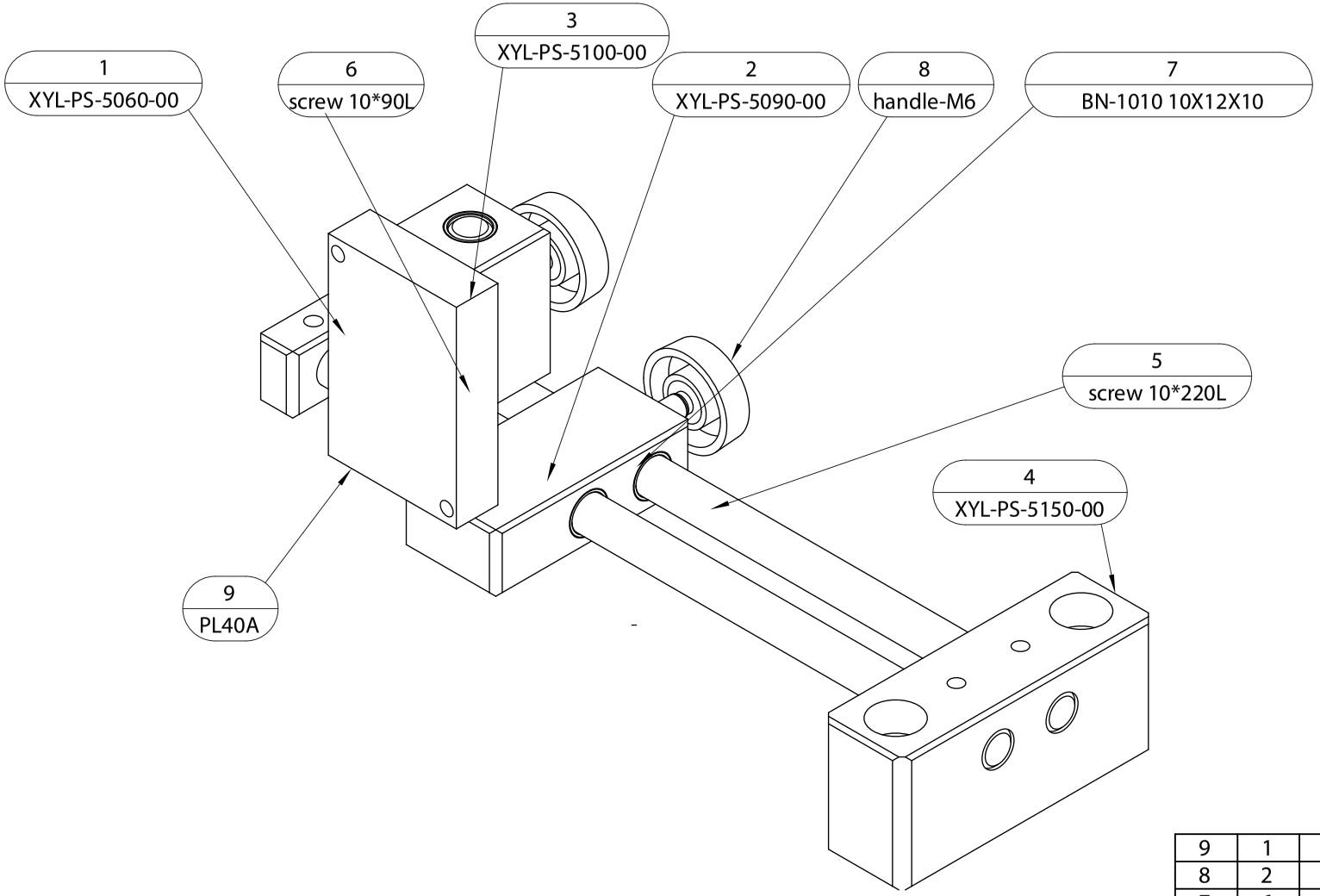

REF #	QTY	Specifics	Part Number
9	1	PL40A	16762010002
8	2	handle-M6	16655000003
7	6	BN-1010 10X12X10	16641130003
6	1	screw 10*90L	
5	2	screw 10*220L	
4	1	XYL-PS-5150-00	130105150400
3	1	XYL-PS-5100-00	130105100400
2	1	XYL-PS-5090-00	130105090400
1	1	XYL-PS-5060-00	130105060400

Sleeve Guider

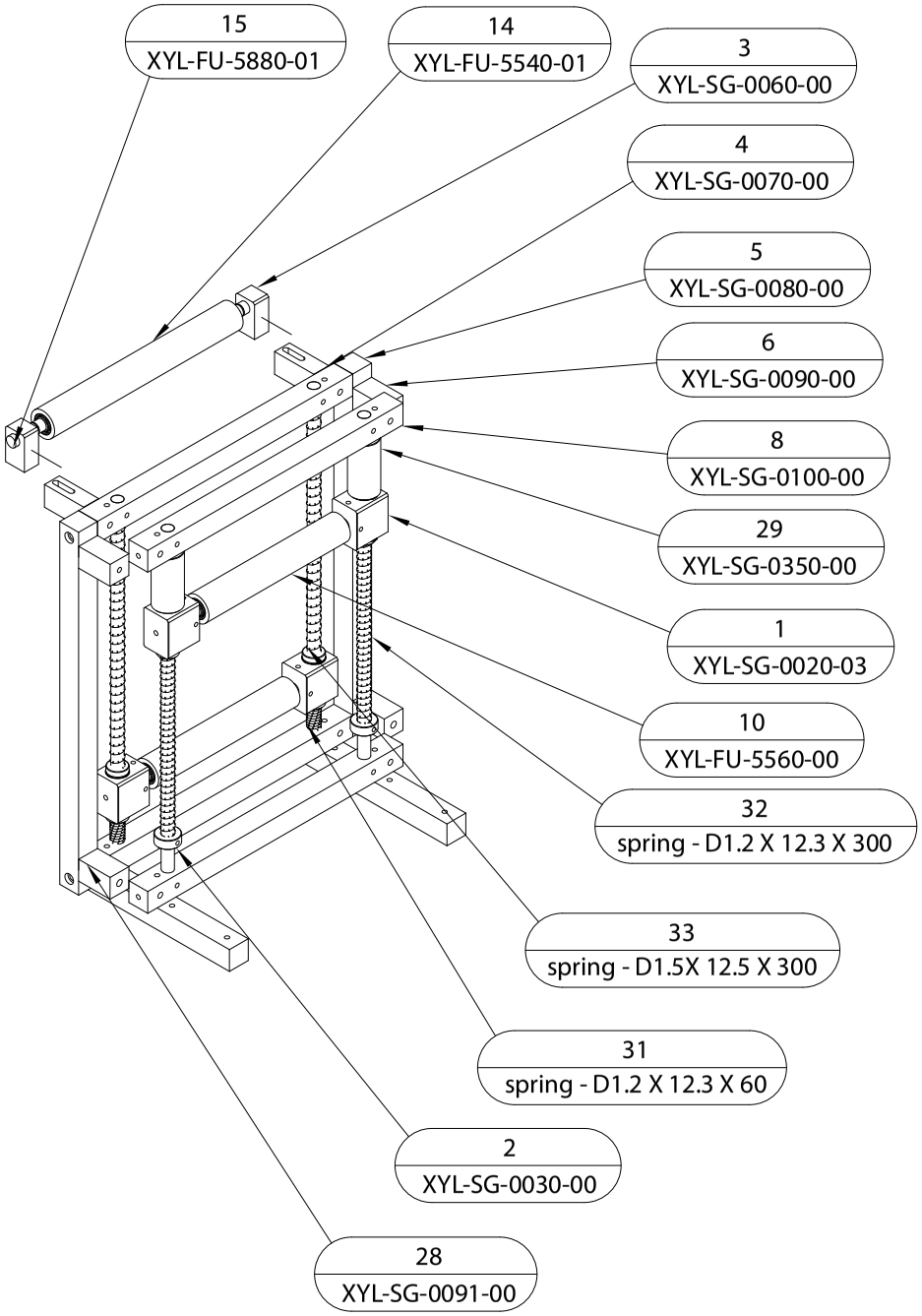

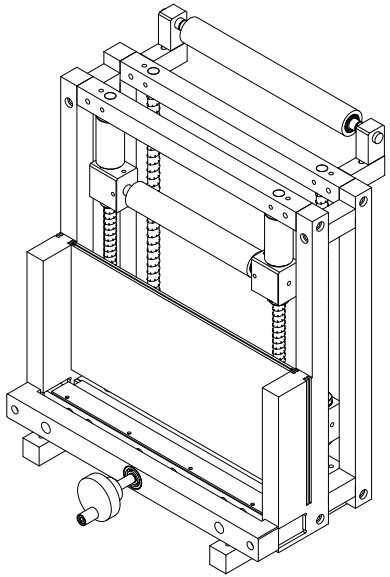

REF #	QTY	Specifics	Part Number
34	2	XYL-SG-0770-00	130120770100
33	2	spring - D1.5X 12.5 X 300	16648010026
32	2	spring - D1.2 X 12.3 X 300	16648010007
31	2	spring - D1.2 X 12.3 X 60	16648010008
30	4	snap ring D20	B0300013
29	2	XYL-SG-0350-00	130120350000
28	2	XYL-SG-0091-00	130120091000
27	2	BM-1210 12X14X10	16641140001
26	1	XYL-SG-0340-00	133120340000
25	2	6000 10X26X8	16641000001
24	2	XYL-SG-0280-00	133120280002
23	1	XYL-DS-5270-00	130025270400
22	1	XYL-SG-0330-00	132120330001
21	1	XYL-SG-0250-01	130120250002
20	2	XYL-SG-0320-00	132120320000
19	2	XYL-SG-0260-01	131120260001
18	1	XYL-SG-0240-02	130120240002
17	1	XYL-SG-0220-01	133120220001
16	2	XYL-SG-0270-00	130120270000
15	1	XYL-FU-5880-01	132085880401
14	1	XYL-FU-5540-01	133085540401
13	6	snap ring D12	B0300009
12	2	XYL-SG-0110-00	132120110000
11		6801ZZ-12X21X5	16641000030
10	2	XYL-FU-5560-00	133085560400
9	4	LM12LUU line	16641020002
8	4	XYL-SG-0100-00	130120100000
7	4	shaft 12,L400	16661000008
6	2	XYL-SG-0090-00	130120090000
5	2	XYL-SG-0080-00	130120080000
4	2	XYL-SG-0070-00	130120070000
3	2	XYL-SG-0060-00	130120060000
2	2	XYL-SG-0030-00	130120030000
1	4	XYL-SG-0020-03	130120020003

Sleeve Propellent

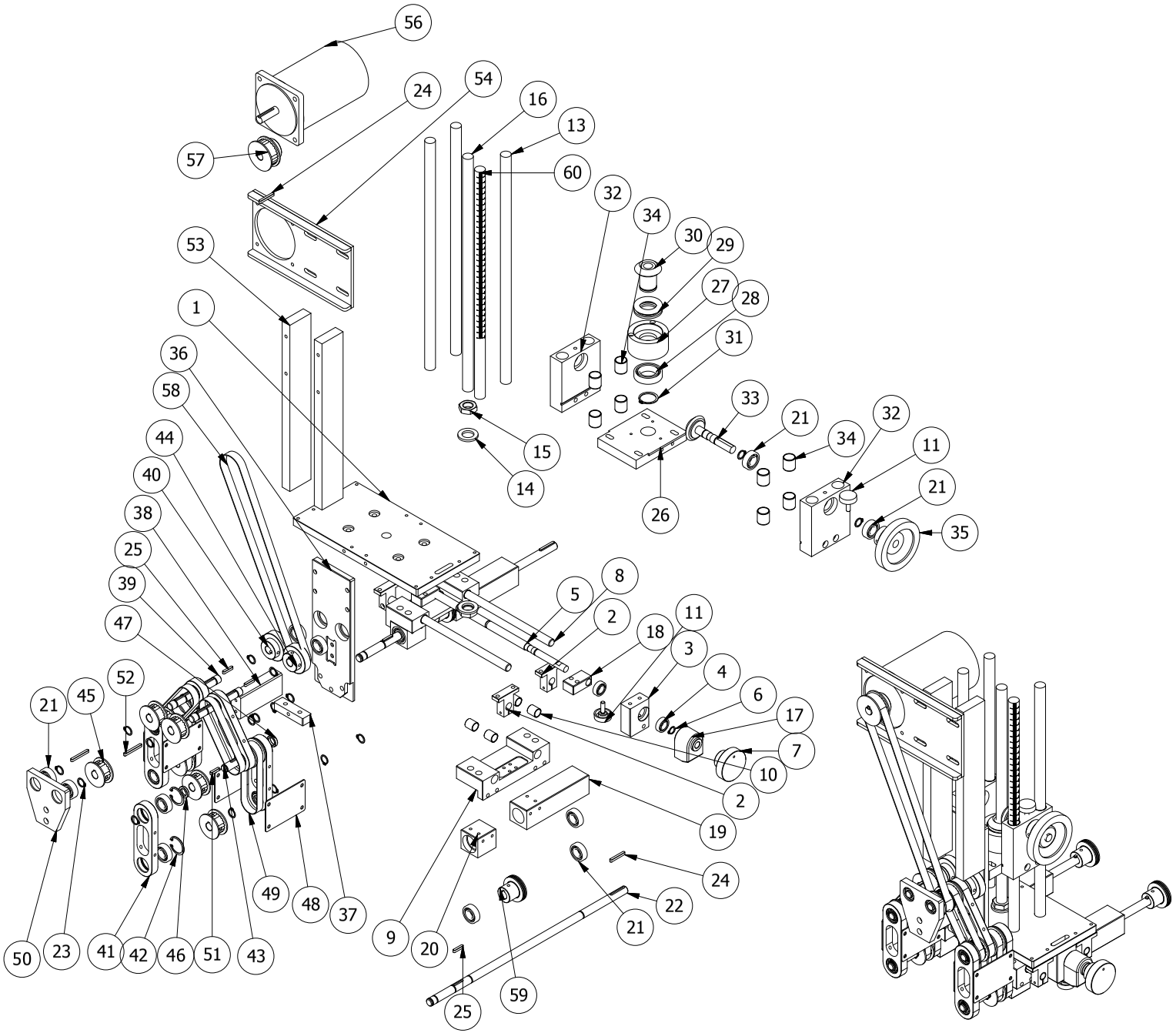

REF #	Specifics	QTY	Part Number
1	XYL-SP-5110-00	1	130115110400
2	SK12	4	16653070003
3	XYL-SP-0350-01	1	130110350401
4	6900ZZ	2	16641000059
5	XYL-SP-0360-02	1	132110360402
6	S-10	1	B0300008
7	XYL-DS-5270-00	1	130025270400
8	φ12*L260	2	B0700035
9	XYL-SP-5330-00	2	130115330400
10	BM-1215 (FI-1215)	8	16641130004
11	M6-handle	2	16655000003
13	XYL-SP-5010-00	3	132115010400
14	M16	2	B0300073
15	M16	2	B0200005
16	SUS 16*420L	1	16659000001
17	DD51 (CE.84153)	1	16765020025
18	XYL-SP-5370-00	2	130115370400
19	XYL-SP-5190-00	2	130115190400
20	XYL-SP-5200-00	2	130115200400
21	6001ZZφ12*φ28*8(JP)	24	16641000004
22	XYL-SP-5030-00	2	130115030400
23	S-12	26	B0300009
24	4*4*30	3	B0300046
25	4*4*20	4	B0300043
26	XYL-SP-5080-01	1	130115080001
27	XYL-SP-5070-00	1	130115070400
28	6905ZZ φ25φ42*9	1	16641000060
29	51105(φ25*φ42*11) (JP)	1	16641010007
30	XYL-SP-5060-00	1	132115060400
31	S-25	1	B0300016
32	XYL-SP-5100-01	2	130115100401
33	XYL-SP-5090-01	1	132115090401
34	BM-1620(SFI-1620)	8	16641130006
35	KRAI Φ80 Φ12	1	16655000046
36	XYL-SP-5180-00	1	130115180400
37	XYL-SP-5270-00	1	130115270400
38	XYL-SP-5320-00	1	130115320400
39	XYL-SP-5300-00	2	132115300400
40	XYL-DS-0280-02	1	133020280402
41	XYL-SP-5220-00	6	130115220400
42	R-28	12	B0300003
43	XYL-SP-5310-00	2	132115310400
44	XYL-DS-0282-01	1	133020282401
45	XYL-DS-5190-01	9	130025190401
46	XYL-DS-0020-00	10	132020020400
47	XYL-DS-5210-00	2	132025210400
48	XYL-SP-5260-00	4	130115260400
49	XL-110*13W	4	16640010004
50	XYL-SP-5171-00	1	130115171400
51	4*4*15	4	B0300042
52	4*4*35	2	B0300047
53	XYL-SP-5020-00	2	130115020400
54	XYL-SP-5410-00	3	132115410400
56	5IK90A-UFTS	1	16760150048
57	XYL-SP-5470-01	1	130115470401
58	XL-270*13W	1	16640010013
59	XYL-SP-5340-00	2	130115340400
60	XYL-SP-5012-00	1	132115012000

Two Reel Cabinet 1

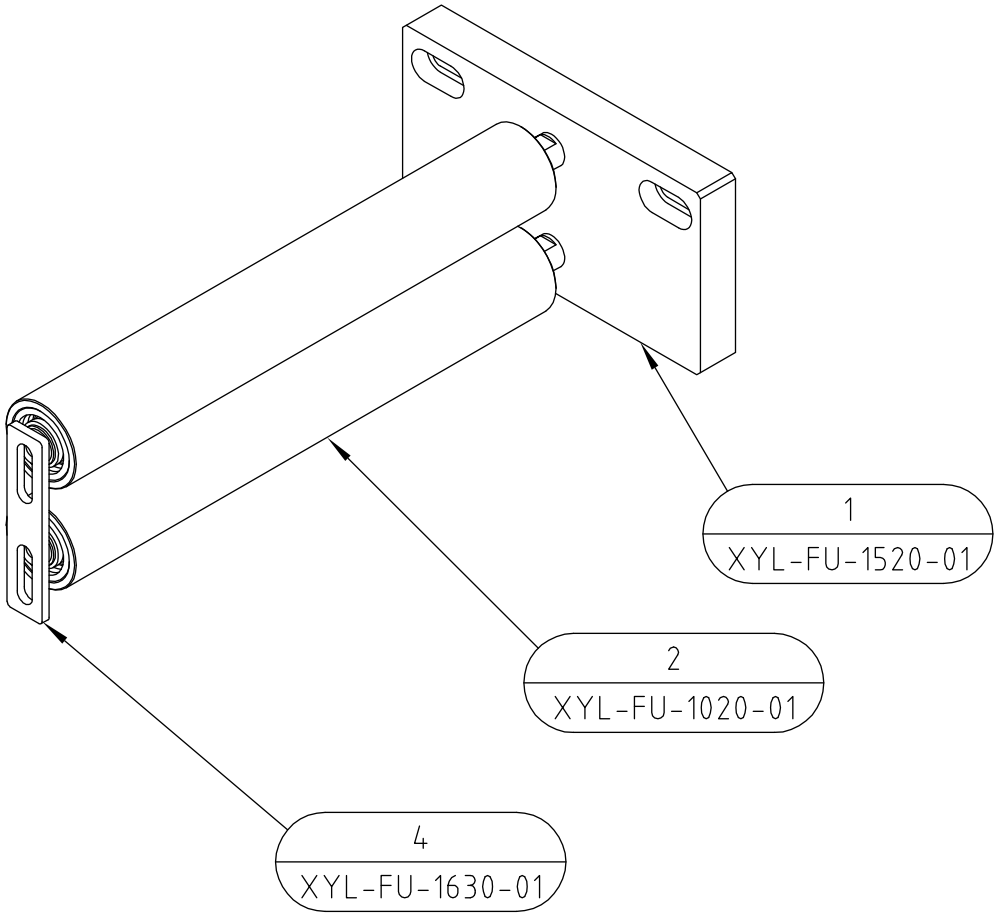

4	1	XYL-FU-1630-01	132081630401
2	2	XYL-FU-1020-01	133081020401
1	1	XYL-FU-1520-01	132081520401
REF #	**QTY**	**Specifics**	**Part Number**

Two Reel Cabinet 2

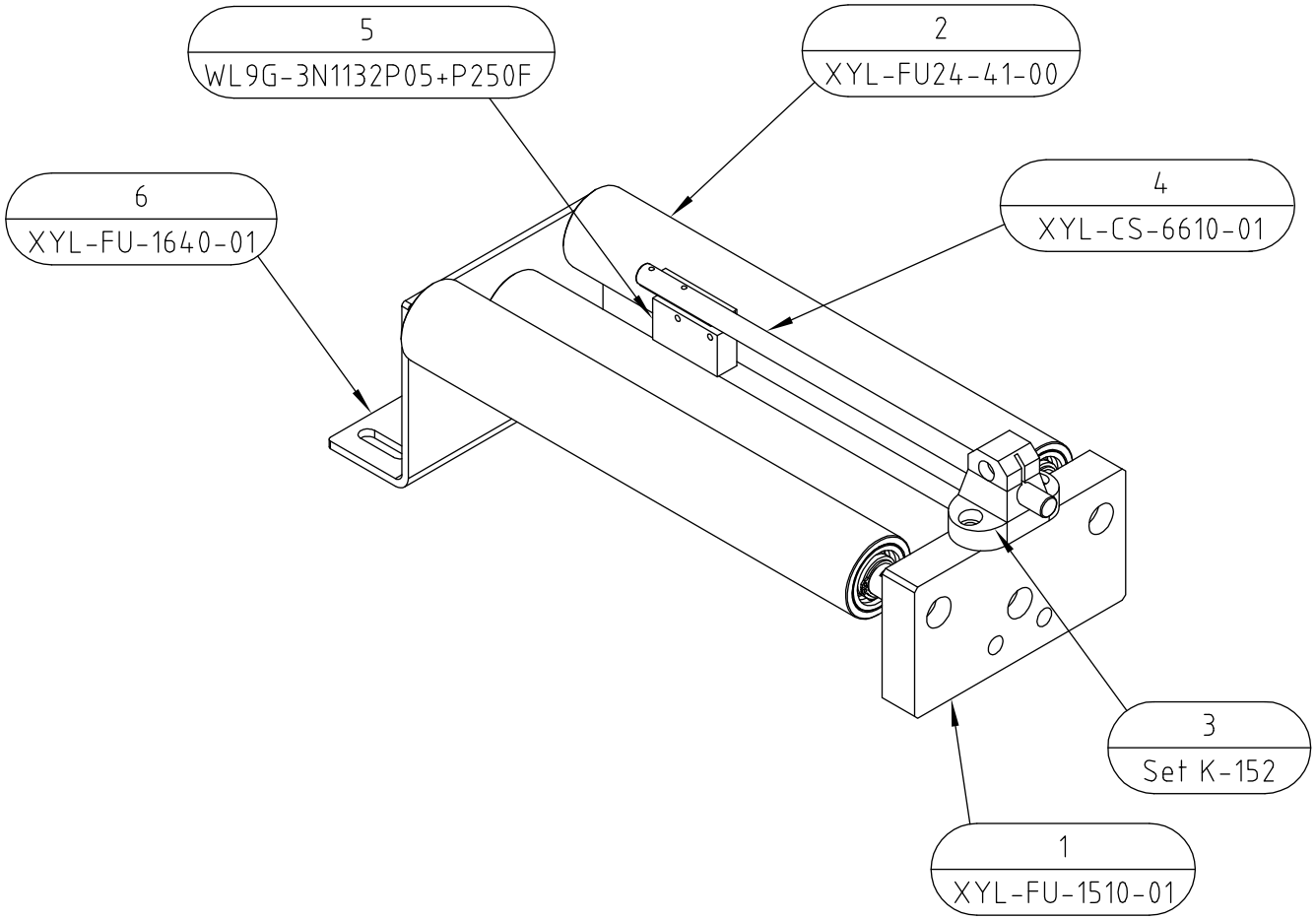

REF #	QTY	Specifics	Part Number
6	1	XYL-FU-1640-01	132081640401
5	1	WL9G-3N1132P05+P250F	16762080003
4	1	XYL-CS-6610-01	132196610401
3	1	Set K-152	16653070001
2	3	XYL-FU-1020-01	133081020401
1	1	XYL-FU-1510-01	130081510401

Two Reel Cabinet 3

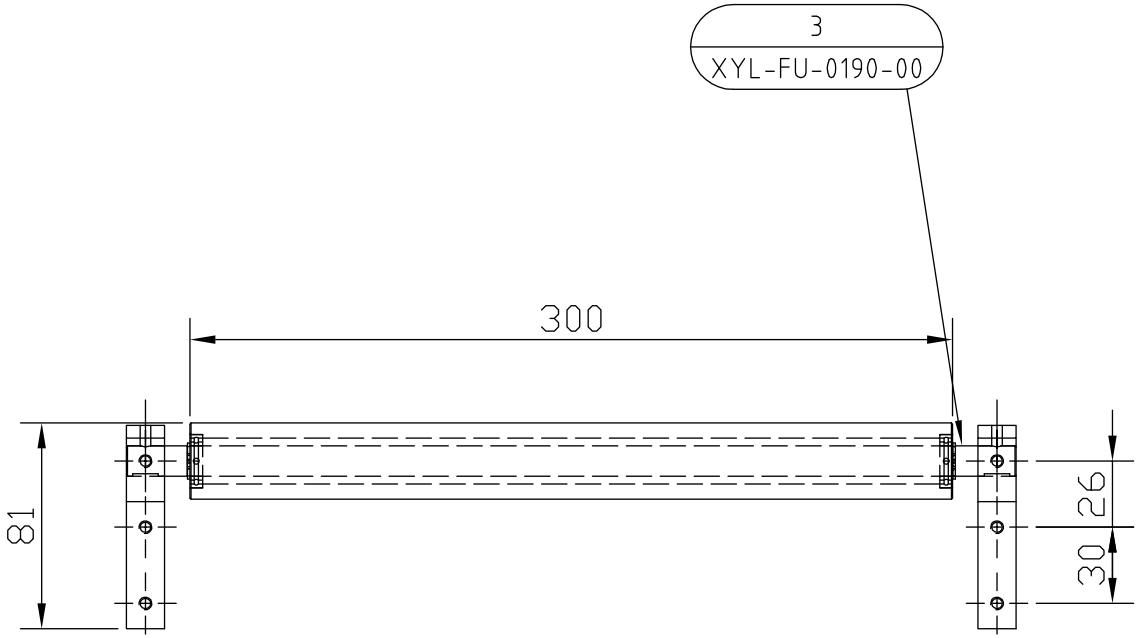

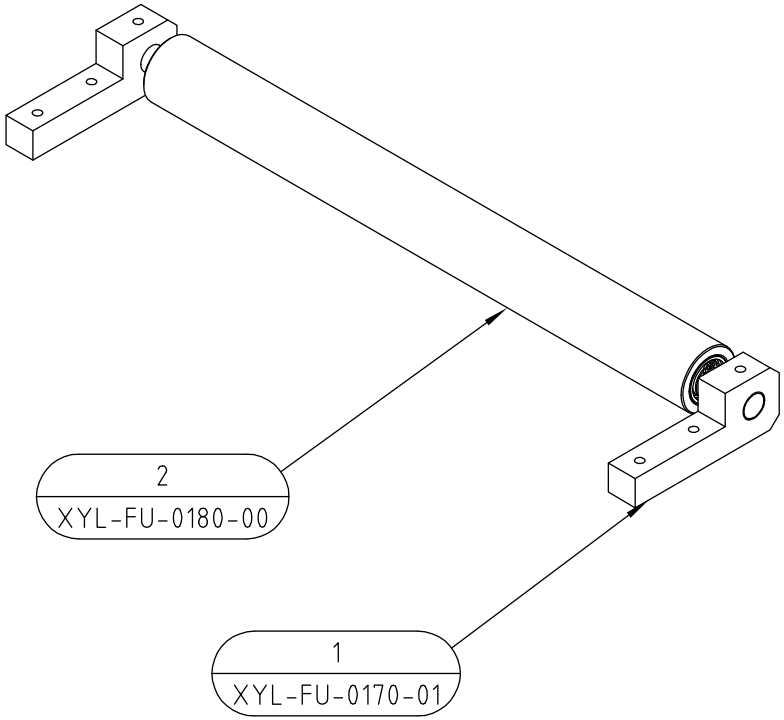

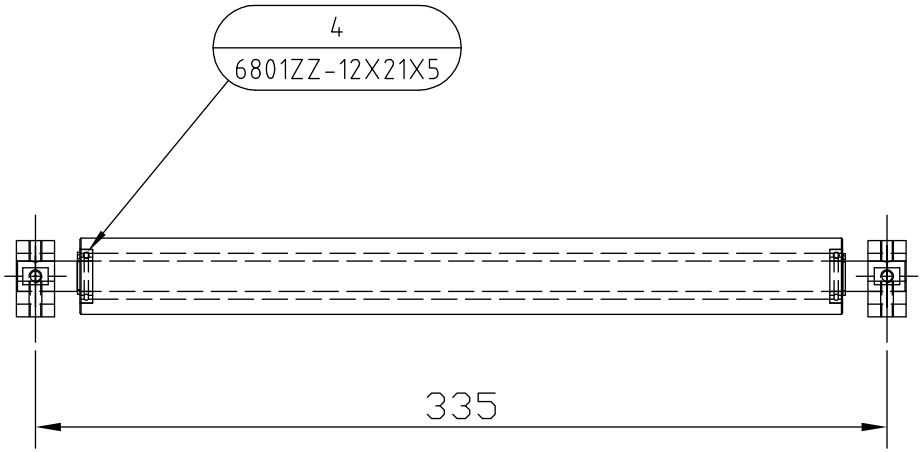

5	2	Hook S-12	B0300009
4	2	6801ZZ-12X21X5	16641000030
3	1	XYL-FU-0190-00	132080190400
2	1	XYL-FU-0180-00	133080180401
1	2	XYL-FU-0170-01	130080170001
REF #	**QTY**	**Specifics**	**Part Number**

Two Reel Cabinet 4

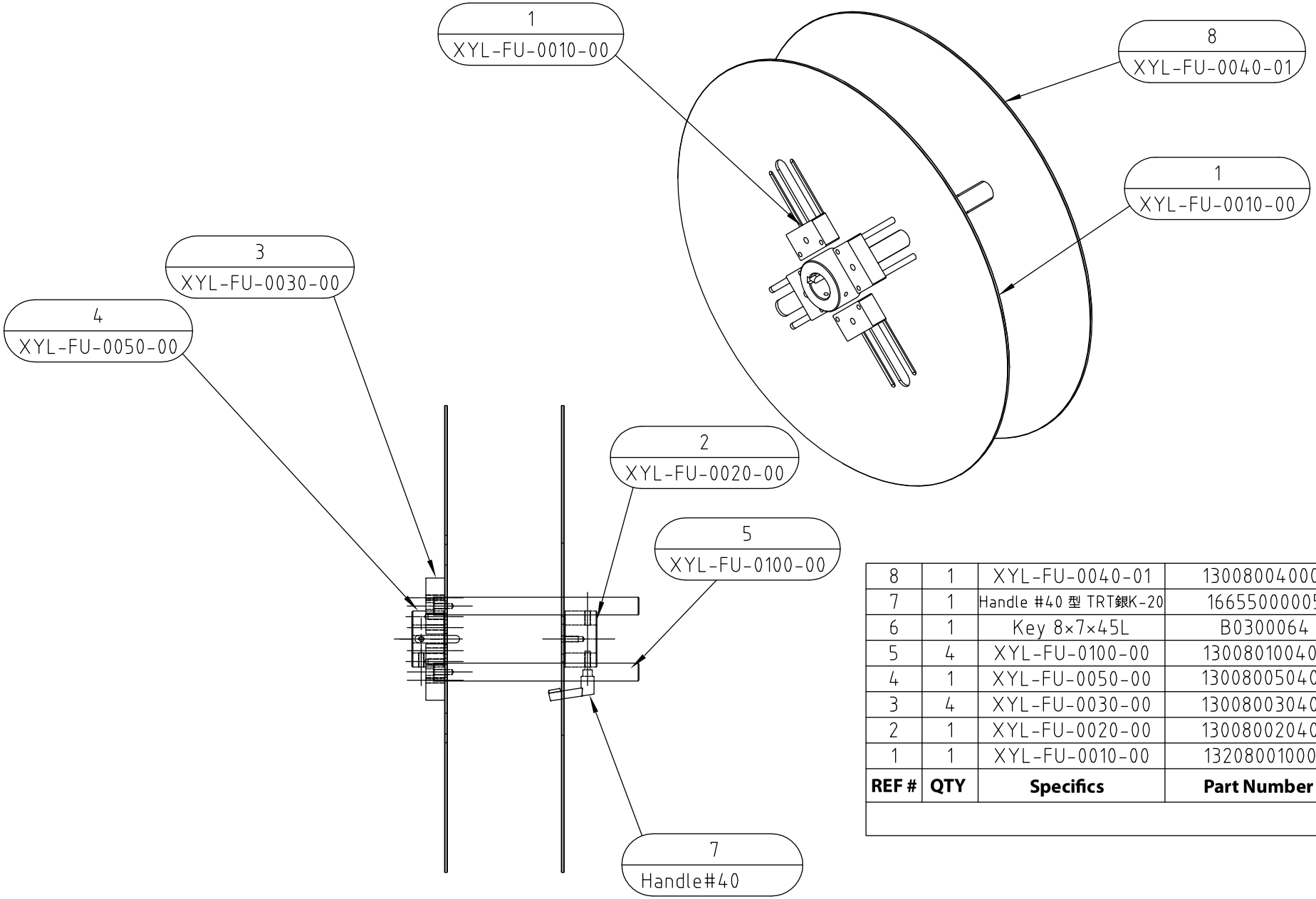

REF #	QTY	Specifics	Part Number
8	1	XYL-FU-0040-01	130080040001
7	1	Handle #40 型 TRT銀K-20	16655000005
6	1	Key 8×7×45L	B0300064
5	4	XYL-FU-0100-00	130080100400
4	1	XYL-FU-0050-00	130080050400
3	4	XYL-FU-0030-00	130080030400
2	1	XYL-FU-0020-00	130080020400
1	1	XYL-FU-0010-00	132080010000

Two Reel Cabinet 5

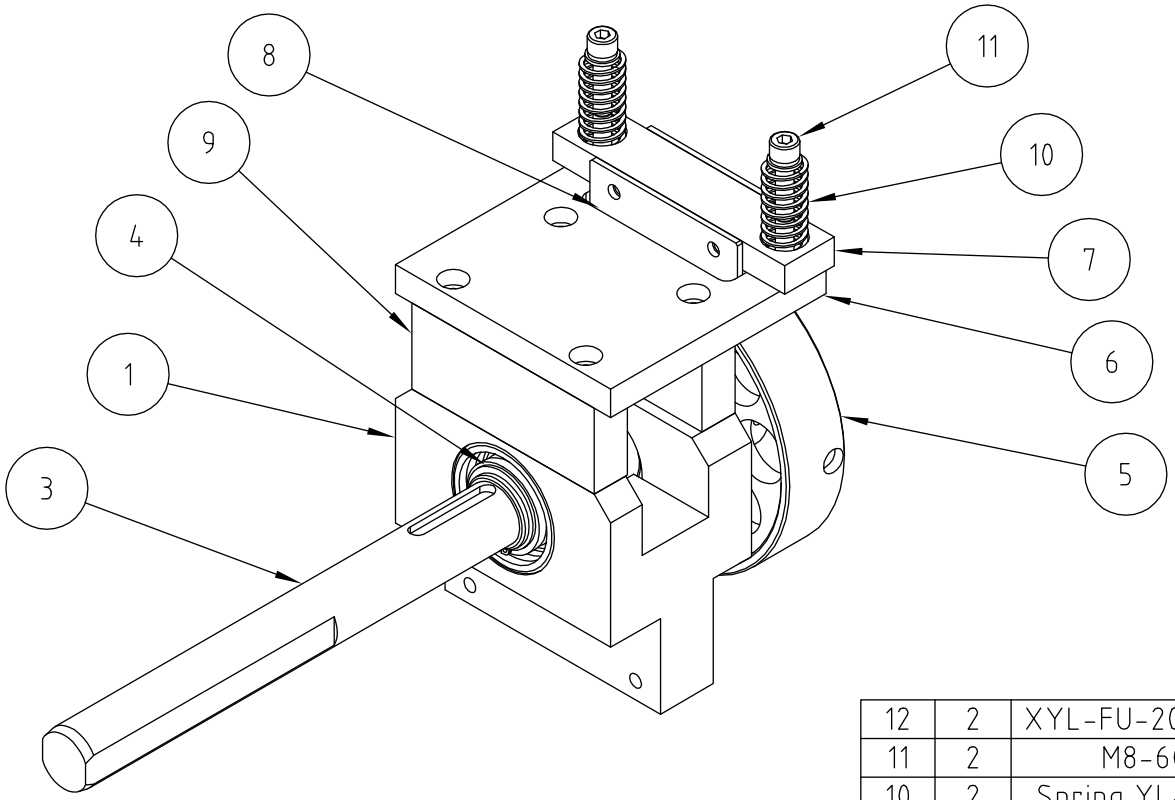

12	2	XYL-FU-2082-00	132082082400
11	2	M8-60L	B0100105
10	2	Spring YL-2050	16648030001
9	2	XYL-FU-2100-00	XYL-FU-2100-00
8	1	XYL-FU-2092-00	132082092000
7	1	XYL-FU-2081-01	132082081401
6	1	XYL-FU-2070-00	130082070400
5	1	XYL-FU-2060-00	132082060400
4	2	Hook-S35	B0300019
3	1	XYL-FU-0092-00	132080092400
2	2	Bearing 6007ZZ - 35 X 62 X 14	16641000011
1	1	XYL-FU-0071-01	132080071401
REF #	**QTY**	**Specifics**	**Part Number**

Two Reel Cabinet 6

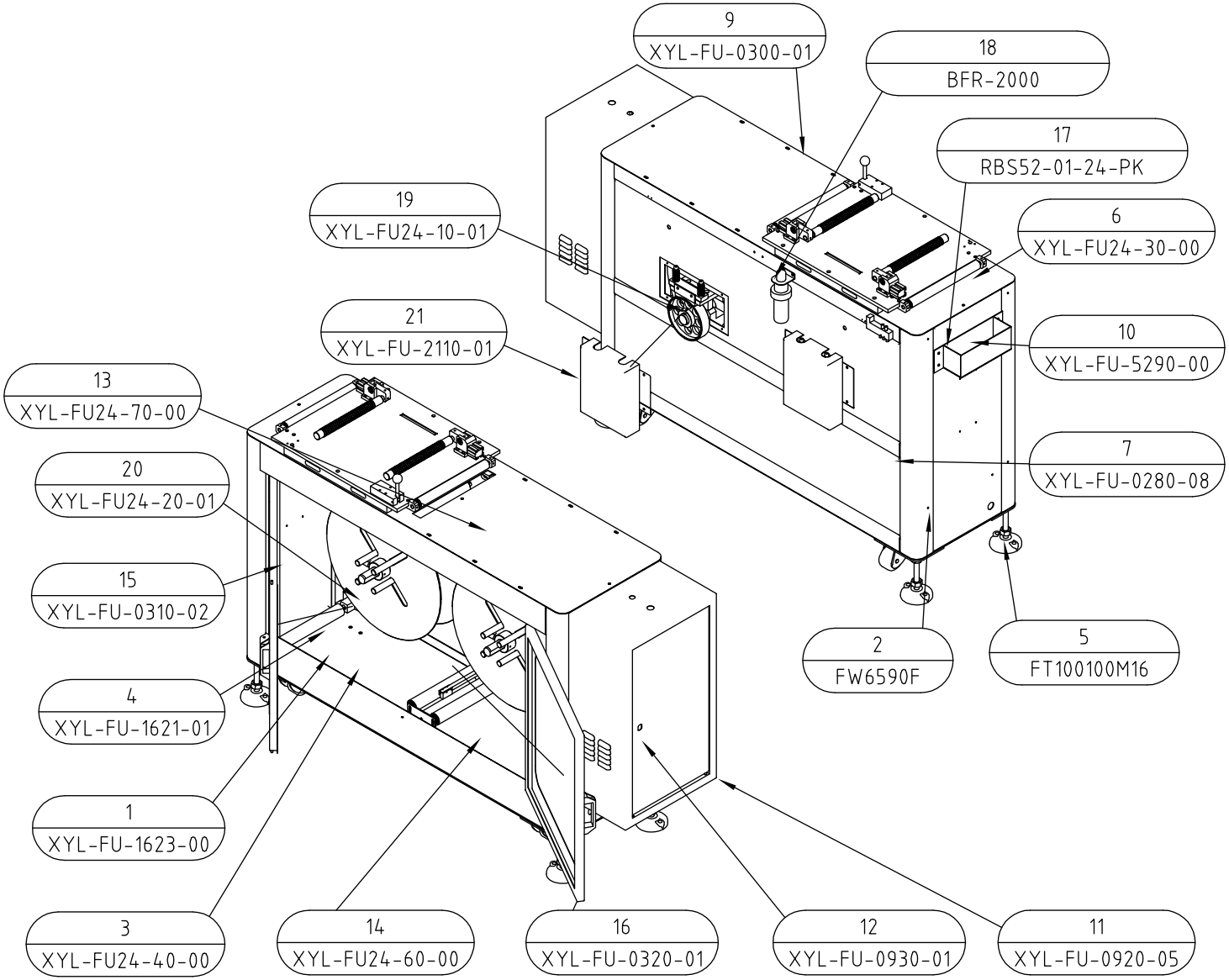

REF #	Specifics	Part Number	QTY
21	XYL-FU-2110-01	132082110401	2
20	XYL-FU24-20-01	Machine Module	2
19	XYL-FU24-10-01	Machine Module	2
18	BFR-2000	16650010001	1
17	RBS52-01-24-PK	16650020003	1
16	XYL-FU-0320-01	132080320001	1
15	XYL-FU-0310-02	133080310001	1
14	XYL-FU24-60-00	Machine Module	1
13	XYL-FU24-70-00	Machine Module	1
12	XYL-FU-0930-01	132080930401	1
11	XYL-FU-0920-05	132080920405	1
10	XYL-FU-5290-00	132085290400	1
9	XYL-FU-0300-01	132080300001	1
8	XYL-FU-0940-01	132080940401	1
7	XYL-FU-0280-08	132080280008	1
6	XYL-FU24-30-00	Machine Module	1
5	FT100100M16	16656000032	4
4	XYL-FU-1621-01	132081621001	2
3	XYL-FU24-40-00	Machine Module	4
2	FW6590F	16656010005	4
1	XYL-FU-1623-00	132081623400	4

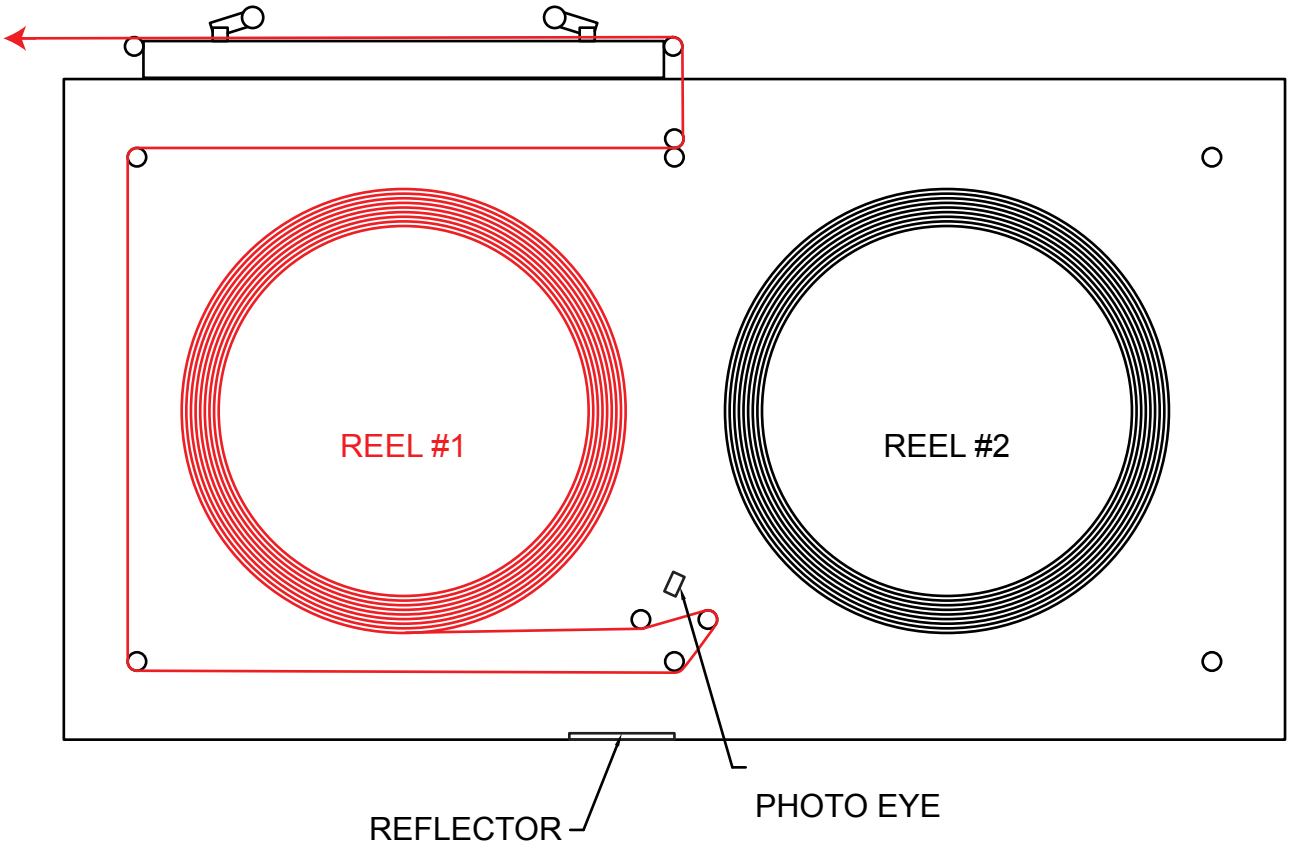

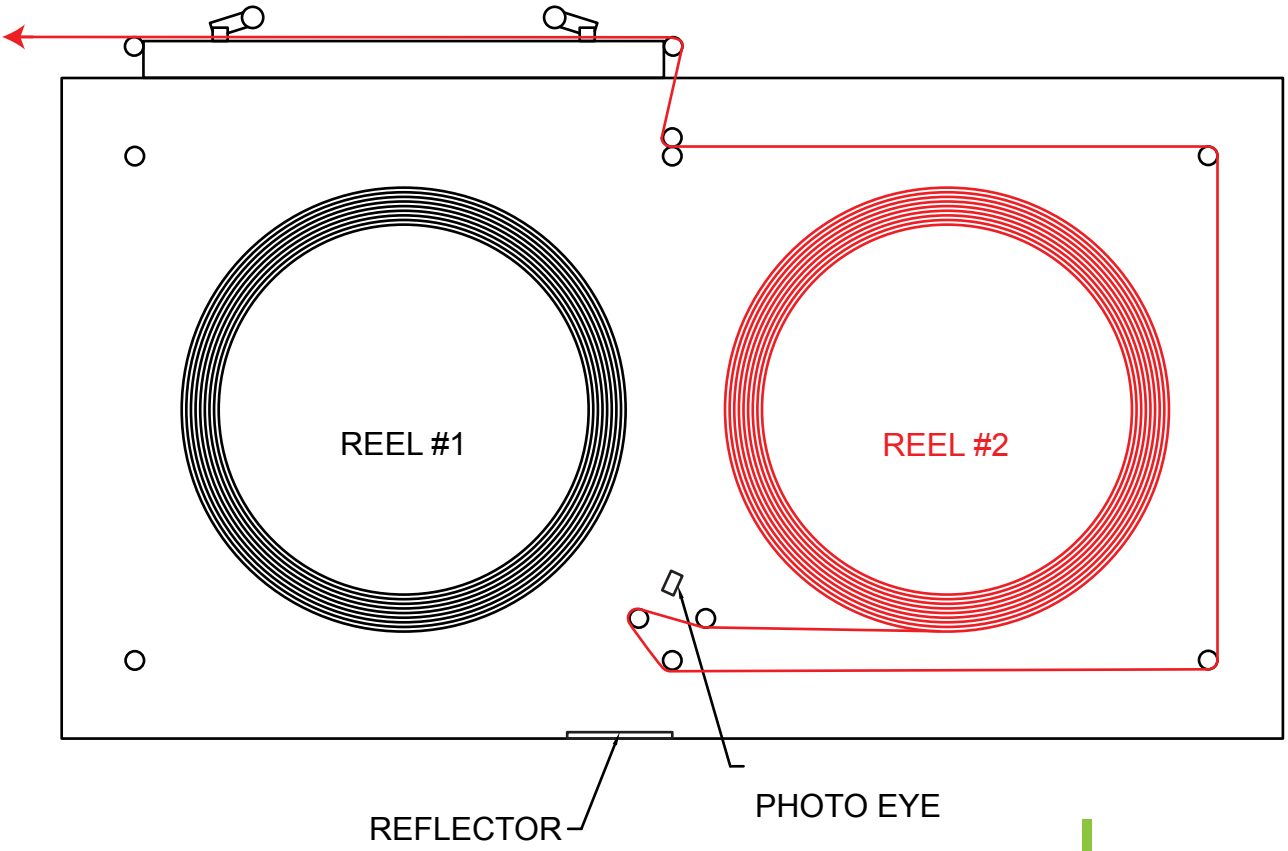

Two Reel Accumulation Cabinet Lacing Diagram

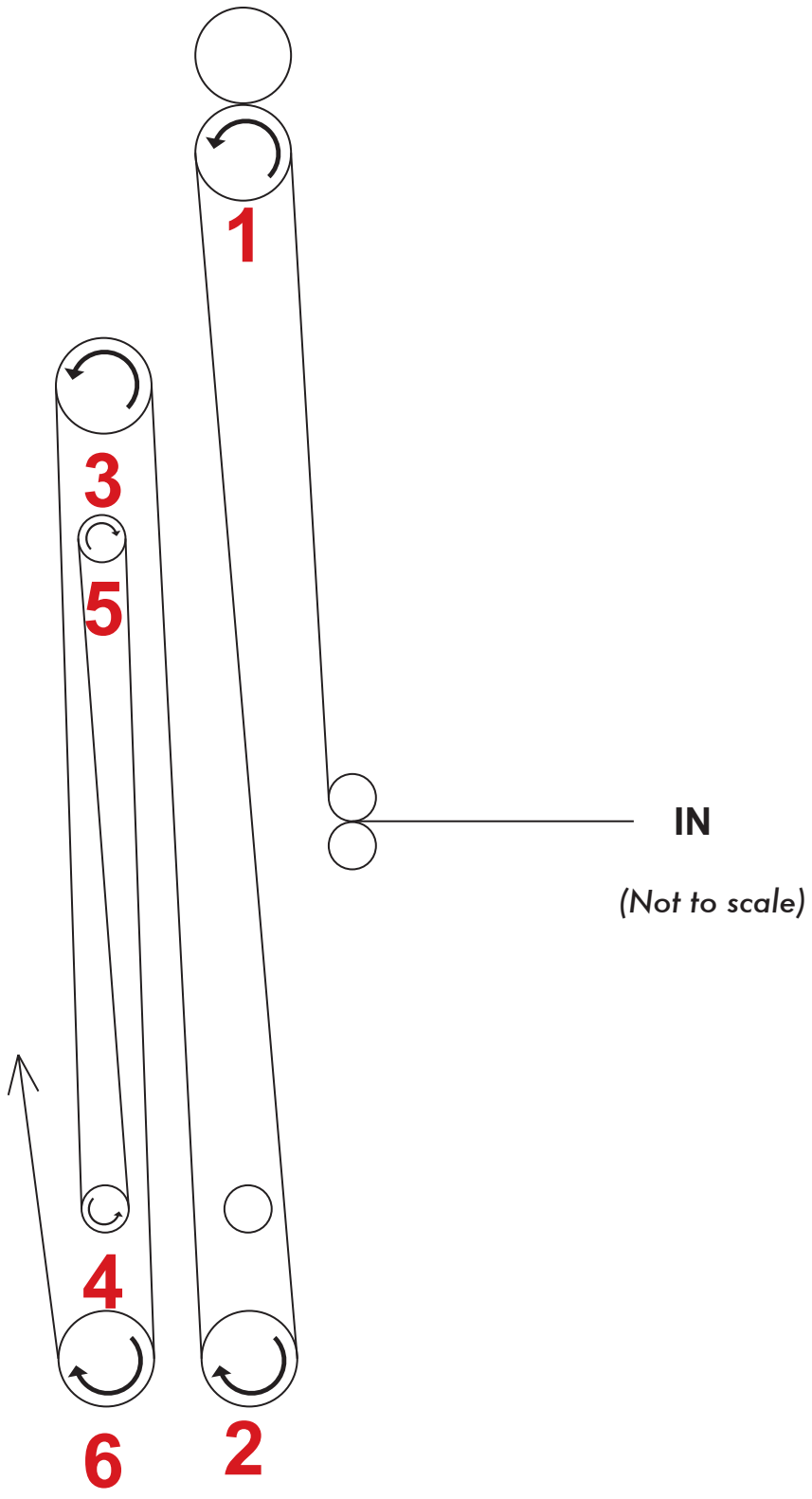

SSA-1 Label Accumulation Cabinet
Lacing Diagram - REVERSE - *Detail*

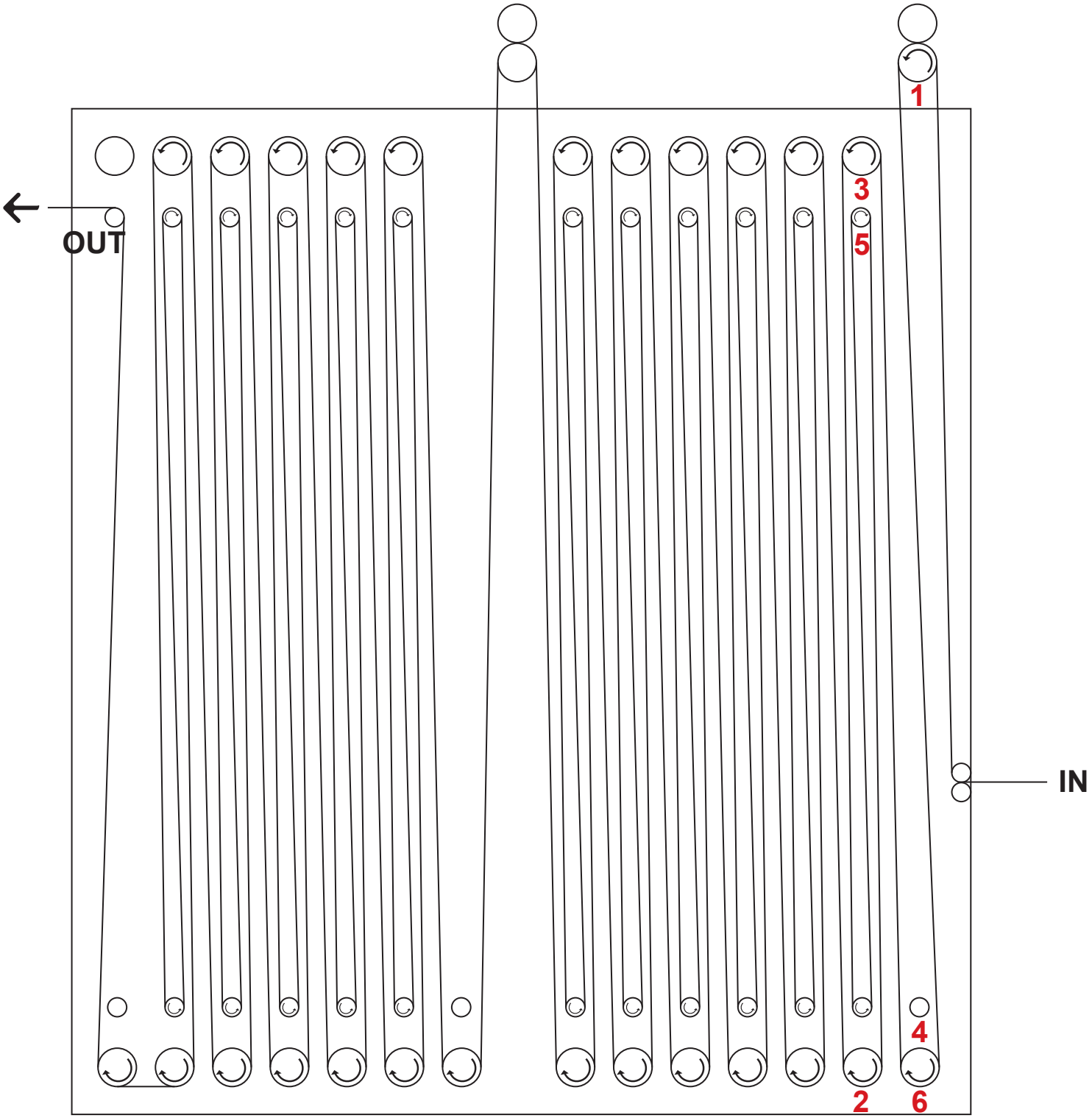

SSA-1 Label Accumulation Cabinet
Lacing Diagram - REVERSE

sleeve seal